SOUCY TRACK SYSTEMS USER GUIDE

S-TECH 012U Installed on other planters



A-8Q0101-5-EN
Rev.

March 2022

5450 St-Roch Street, P.O. Box 400 / Drummondville (Quebec) J2B 6W3 / CANADA
Toll free: 1 877 474-6665
Fax: 819 477-9423

www.soucy-track.com

Page Intentionally Left Blank

5450 St-Roch Street, P.O. Box 400 / Drummondville (Quebec) J2B 6W3 / CANADA
Toll free: 1 877 474-6665
Fax: 819 477-9423

www.soucy-track.com

TABLE OF CONTENTS

TITLE	PAGE
SECTION 1 S-TECH 012P+U LOAD & SPEED RATING AND TRACK SYSTEM SPECIFICATIONS	1
1.1 ROAD TRANSPORT SPECIFICATIONS	1
1.2 FIELD WORK SPECIFICATIONS	2
1.3 S-TECH 012P+U FOOTPRINT SPECIFICATION	3
1.4 S-TECH 012P+U GENERAL SPECIFICATIONS	5
1.5 JD 1770NT AND 1775NT WITH S-TECH 012P – 12 / 16R30 FIELD MODE SPECIFICATIONS	6
1.6 JD 1770NT AND 1775NT WITH S-TECH 012P – 12 / 16R30 TRANSPORT MODE SPECIFICATIONS	7
1.7 JD 1770NT AND 1775NT WITH S-TECH 012P – 24R30 FIELD MODE SPECIFICATIONS	8
1.8 JD 1770NT AND 1775NT WITH S-TECH 012P – 24R30 TRANSPORT MODE SPECIFICATIONS	9
SECTION 2 INTRODUCTION	11
2.1 PRESENTATION	11
2.2 HOW TO USE THIS GUIDE	11
2.3 SYSTEM DESCRIPTION	12
2.4 CLEARANCE REQUIREMENT OF JD 1770NT AND 1775NT WITH S-TECH 012P 12 / 16 AND 24R30	14
2.5 SERIAL NUMBER AND IDENTIFICATION FOR S-TECH 012P + U	16
SECTION 3 SAFETY	17
3.1 GENERAL	17
3.2 SAFETY SIGNS USED IN THIS GUIDE	18
3.3 SAFETY INSTRUCTIONS	18
3.4 SAFETY LABELS	21
SECTION 4 PARTS CATALOG OF THE TRACK SYSTEM S-TECH 012P	23
4.1 TRACK SYSTEM S-TECH 012P 24R30 RIGHT (8032009-0070-4)	24
4.2 TRACK SYSTEM S-TECH 012P 24R30 LEFT (8032009-0080-4)	25
4.3 TRACK SYSTEM S-TECH 012P 24R30 CENTRE (8032009-0380-4)	26
4.4 LIFT ARM 24 ROWS - CENTER ASSEMBLY (8031029-0400-1)	27
4.5 LIFT ARM 24 ROWS - RIGHT ASSEMBLY (8031029-0380-1)	28
4.6 LIFT ARM 24 ROWS - LEFT ASSEMBLY (8031029-0390-1)	29
4.7 UNDERCARRIAGE ASSEMBLY OF S-TECH 012P + U (8032009-0120-5)	30
4.8 UNDERCARRIAGE ASSEMBLY WITH SENSORS OF S-TECH 012P (8032009-0370-5)	32
4.9 TENSIONER PRE-ASSEMBLY (8032009-0330-4)	34
4.10 UNDERCARRIAGE PRE-ASSEMBLY (8032009-0320-4)	35
4.11 MIDROLLER WHEEL HUB ASSEMBLY (8034013-0360-1)	36
4.12 IDLER WHEEL HUB ASSEMBLY (8034013-0410-1)	37
4.13 TONE WHEEL HUB ASSEMBLY (8034013-0430–1)	38
4.14 UPPER SCRAPER ASSEMBLY (8032009–0590–1)	39
4.15 HYDRAULIC SYSTEM ASSEMBLY (8035008–0010–4)	40

TITLE PAGE

4.16 HYDRAULIC FILLING HOSE ASSEMBLY (SPT-0008–1) 40

SECTION 5 PREPARATION 41
5.1 TOOLS LIST 41
5.2 PREPARATION 41

SECTION 6 INSTALLATION OF THE TRACK SYSTEM 43
6.1 INSTALLATION OF THE TRACK SYSTEM – 12 / 16R30 43
6.1.1 REMOVAL OF OEM COMPONENTS / OUTER ARM – 12 / 16R30 43
6.1.2 REMOVAL OF HEIGHT SENSOR – 12 / 16R30 45
6.1.3 DISCONNECTION OF MOTION SENSOR – 12 / 16R30 46
6.1.4 REMOVAL OF LIFT ARM 12 / 16R30 47
6.1.5 HEIGHT ADJUSTMENT OF CENTRE FRAME – 12 / 16R30 48
6.1.6 GROUND DRIVE OPTION 49
6.1.7 INSTALLATION OF OUTER LIFT ARM – 12 / 16R30 50
6.1.8 CONNECTION OF THE MOTION SENSOR – 12 / 16R30 51
6.1.9 REMOVAL OF OEM COMPONENTS FROM CENTRE LIFT ARM – 12 / 16R30 52
6.1.10 INSTALLATION OF HEIGHT SENSOR – 12 / 16R30 54
6.1.11 RELOCATION OF VARIABLE RATE DRIVE MOTOR – 12 / 16R30 55
6.1.12 INSTALLATION OF THE CENTRE LIFT ARM – 12 / 16R30 56
6.1.13 ADJUSTMENT OF THE ROD END – 12 / 16R30 57
6.1.14 REMOVAL OF SERVICE LOCK – 12 / 16R30 58
6.2 INSTALLATION OF THE TRACK SYSTEM – 24R30 59
6.2.1 HEIGHT ADJUSTMENT OF CENTRE FRAME– 24R30 59
6.2.2 REMOVAL OF COMPONENTS / OUTER LIFT ARM – 24R30 60
6.2.3 LADDER REMOVAL –24R30 62
6.2.4 DISCONNECTION OF THE MOTION SENSOR –24R30 63
6.2.5 REMOVAL OF THE LIFT ARM –24R30 64
6.2.6 GROUND DRIVE OPTION 65
6.2.7 INSTALLATION OF OUTER LIFT ARM –24R30 66
6.2.8 CONNECTION OF THE MOTION SENSOR –24R30 67
6.2.9 REMOVAL OF COMPONENTS / CENTRE LIFT ARM –24R30 68
6.2.10 INSTALLATION OF CENTRE LIFT ARM –24R30 70
6.2.11 ADJUSTMENT OF THE HEIGHT SENSOR –24R30 71
6.2.12 REINSTALLATION OF THE LADDER –24R30 73
6.2.13 REMOVAL OF THE SERVICE LOCK –24R30 74

SECTION 7 ROAD TEST AND FINAL ADJUSTMENTS OF THE TRACK SYSTEM 75
7.1 CLEARANCE VERIFICATION 75
7.2 ADJUSTMENT OF THE TRACK TENSION 77
7.3 FILLING HOSE BLEEDING SEQUENCE 79
7.4 HYDRAULIC LOADING SEQUENCE 80
7.5 HYDRAULIC UNLOADING SEQUENCE 82
7.6 HYDRAULIC PRESSURE VERIFICATION 84

TITLE PAGE

7.7 UPPER SCRAPER ADJUSTMENT 86

SECTION 8 MAINTENANCE OF THE TRACK SYSTEM 87
8.1 REGULAR MAINTENANCE SCHEDULE 87
8.2 AXLE AND WHEEL LUBRICATION 88
8.3 CLEANING 91
8.4 TRACK ROTATION 92
8.5 IDLER WHEELS ROTATION 94
8.6 MAINTENANCE OF THE UPPER SCRAPER BLOCK 95
8.7 SPEED SENSOR ADJUSTMENT PROCEDURE 96
8.8 LONG-TERM STORAGE PROCEDURE 100
8.9 LONG-TERM STORAGE CONDITIONS 100

SECTION 9 TRACK SYSTEM OPERATION 101
9.1 BREAK-IN PERIOD, NEW TRACK. 101
9.2 USE OF TALC 101
9.3 SAFE OPERATION 102
9.4 ROAD TRAVEL GUIDELINES 102

SECTION 10 WARRANTY POLICY AND PROCEDURE 103
10.1 SCOPE 103
10.2 COMMITMENT 103
10.3 WARRANTY PERIOD 103
10.4 EXCLUSION 104
10.5 LIMITATIONS 104
10.6 TERMS 105

SECTION 11 REPLACEMENT PROGRAM FOR RUBBER TRACKS. 107
11.1 AGRICULTURAL TRACK 107
11.2 ELIGIBILITY 107
11.3 OWNER COMMITMENT 107
11.4 WARRANTY PERIOD FOLLOWING THE REPLACEMENT 107
11.5 OTHER CONDITIONS 108

SECTION 12 APPENDIX 109

Page Intentionally Left Blank

SECTION 1 S-TECH 012P+U LOAD & SPEED RATING AND TRACK SYSTEM SPECIFICATIONS

1.1 ROAD TRANSPORT SPECIFICATIONS

Road Transport	
Maximum speed : **20 mph - 32 km/h / 1/2 HOUR MAXIMUM**	
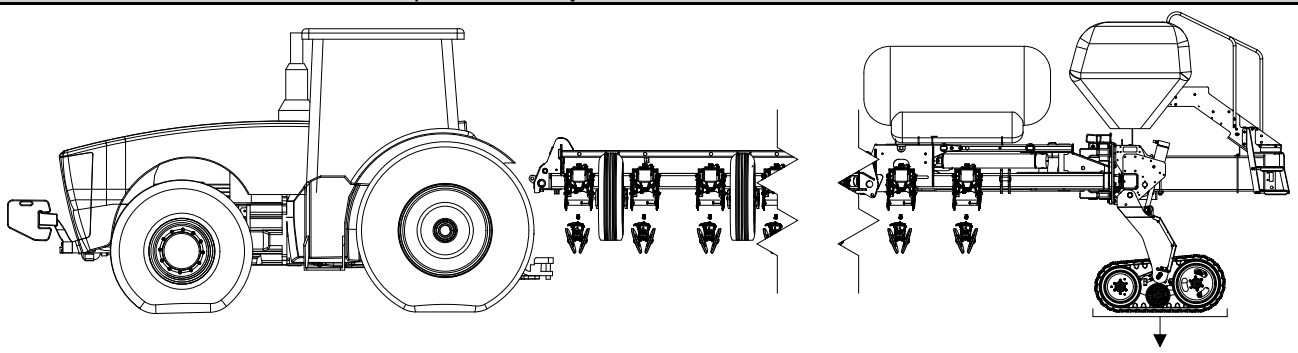	
Maximum authorized load on 4 tracks	**25 000 lb - 11 400 kg**
THIS WEIGHT REPRESENTS HALF-FULL PLANTER: 50 BUSHELS (1350 Kg) OF SEED AND 200 U.S. GALLONS (750 L) OF FERTILIZER.	

Road Transport	
Maximum speed : **20 mph - 32 km/h / 1 HOUR MAXIMUM**	
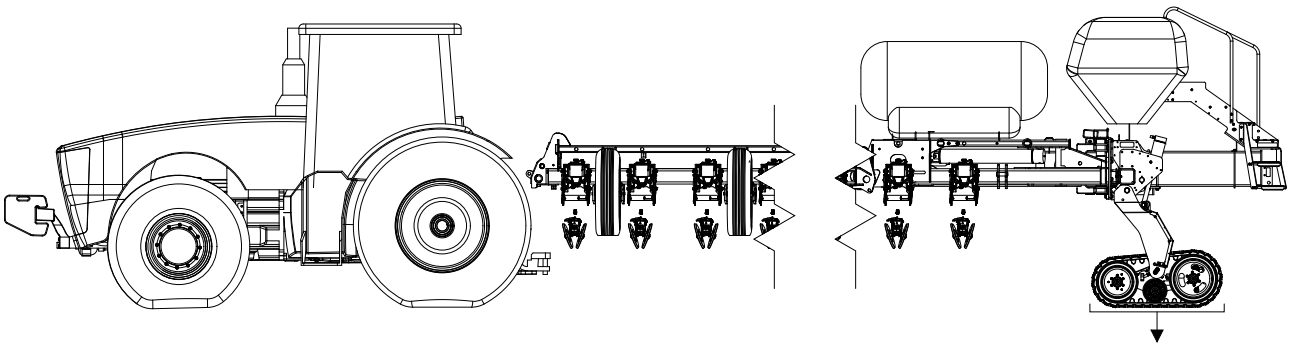	
Maximum authorized load on 4 tracks	**20 000 lb - 9 090 kg**
THIS WEIGHT REPRESENTS EMPTY PLANTER 24 ROWS	

NOTICE

- WHEN TRANSPORTING MACHINE ON ROADS, DO NOT EXCEED 32 KM/H (20 MPH). REDUCE SPEED WHEN TRAVELING ON ROUGH GROUND.
- WHEN TRANSPORTING MACHINE ON ROADS, HOPPERS FOR SEED FERTILIZER AND PESTICIDE MUST BE HALF-FULL OR LESS AND TOWED LOAD MUST BE EMPTY. EXCEEDING THIS WEIGHT LEADS TO POOR FRONT-END STABILITY, POSSIBLE LOSS OF STEERING, AND EXCESSIVE FRAME LOADING.

1.2 FIELD WORK SPECIFICATIONS

Field Work	
Maximum speed : **13 mph - 20 km/h**	
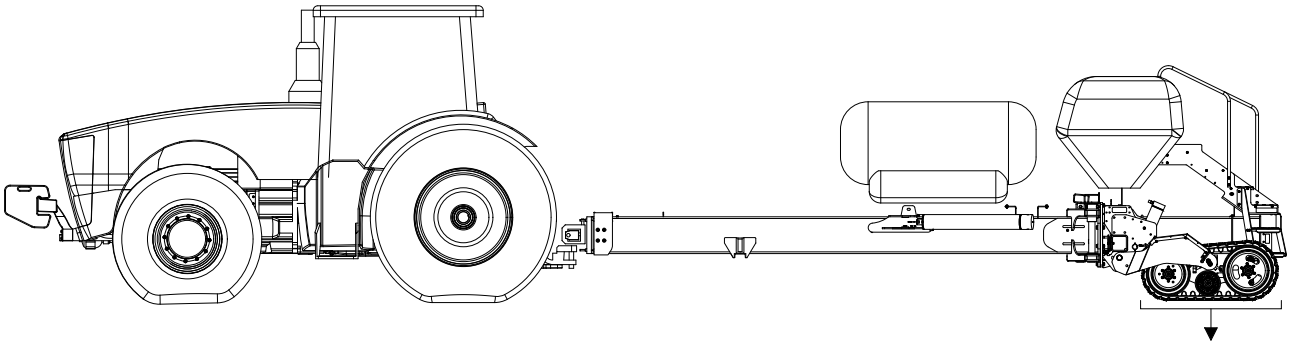	
Maximum authorized load on 4 Tracks	**30 000 lb - 13 600 kg**

NOTICE

- THIS TABLE IS INTENDED TO SERVE AS A GUIDE ONLY; ALWAYS REFER TO THE SPECIFICATIONS OF THE PLANTER MANUFACTURER'. NEVER EXCEED TRANSPORT LIMITATION SPECIFIED BY PLANTER MANUFACTURER.
- IN TRANSPORT MODE, DO NOT LEAVE PLANTER AT MAXIMUM HEIGHT, LOWER PLANTER 4" (100 MM) BELOW THE MAXIMUM HEIGHT TO DISTRIBUTE LOAD EVENLY ON TRACKS
- REDUCE SPEED AND LOAD ON CROWNED ROADS TO PREVENT UNEVEN TRACK WEAR.
- WHEN PLANTER IS TRANSPORTED ON ROADS OVER LONG DISTANCES OR IN HOT WEATHER, SPRINKLE A CUP OF TALC POWDER IN EACH TRACK SYSTEM TO LUBRICATE THE TRACK AND WHEELS.
- CLEAN UP BUILD-UPS OF MUD AND RESIDUE ON THE CHASSIS ON A REGULAR BASIS. DO IT MORE FREQUENTLY IN STICKY AND WET SOILS..
- AVOID SHARP TURNS ON HARD SURFACES WHEN LOADED
- DRIVING ON ROADS WITH TRACKS CAN WEAR THREAD UP TO 15 TIMES FASTER THAN IN FIELDS. IN ORDER TO MAXIMIZE TRACK LIFE, MINIMIZE ROAD TRAVEL, AND RESPECT THE LOAD AND SPEED GUIDELINES ABOVE.
- **TO MAXIMIZE TRACK SYSTEM LIFE, AVOID:**
  > TRAVELLING AT HIGH SPEED ON ROADS OVER LONG DISTANCES.
  > TRANSPORTING THE PLANTER ON ROADS UNDER HOT WEATHER [85 °F/30 °C) OVER LONG DISTANCES.

1.3 S-TECH 012P+U FOOTPRINT SPECIFICATION

Figure 1.1 S-TECH 012P RUBBER TRACK FOOTPRINT : 414 IN² (0.267 M²)

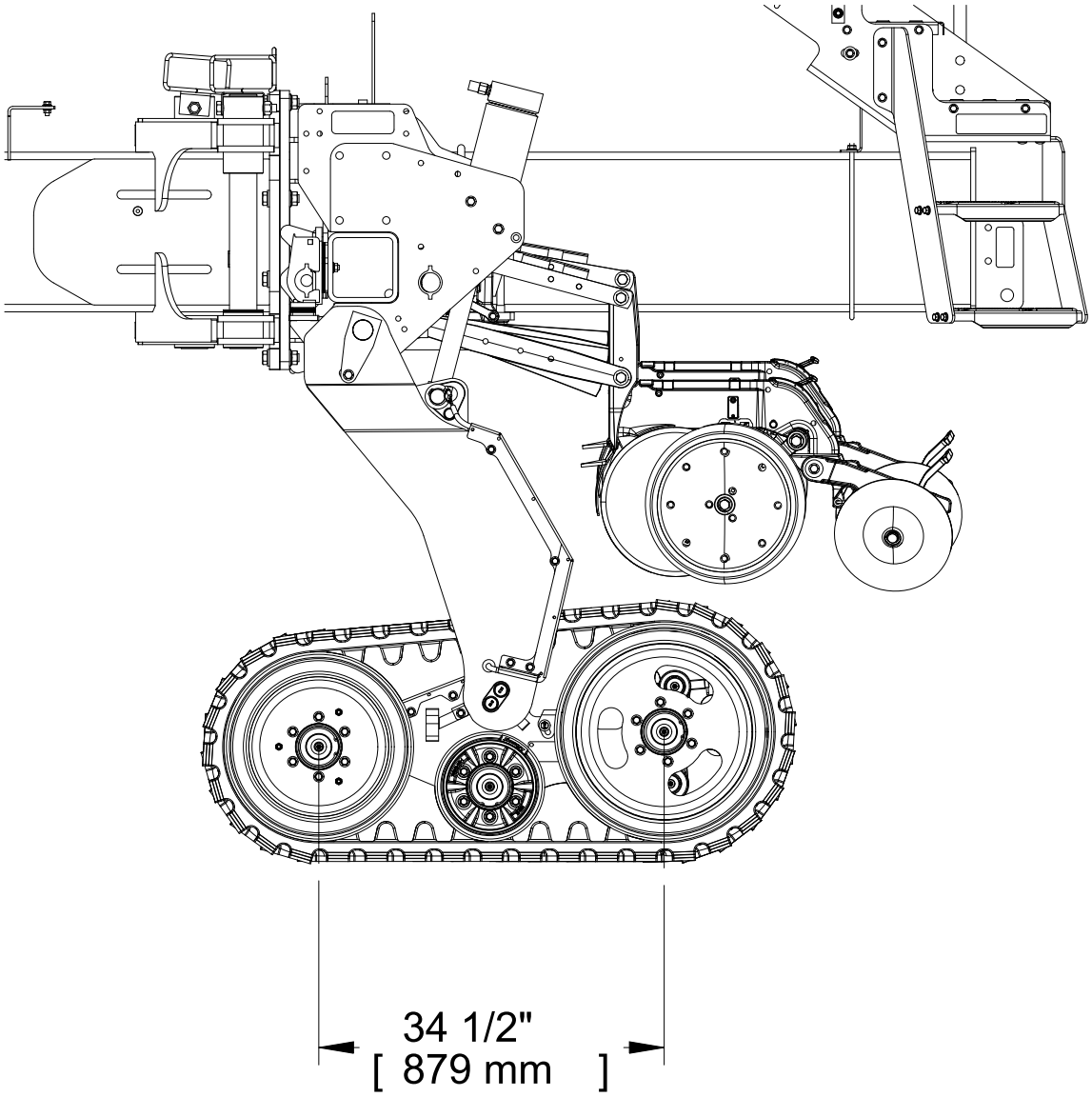

Figure 1.2 JD 1770NT and 1775NT TOTAL RUBBER TRACK FOOTPRINT : 1656 IN² (1.06 M²)

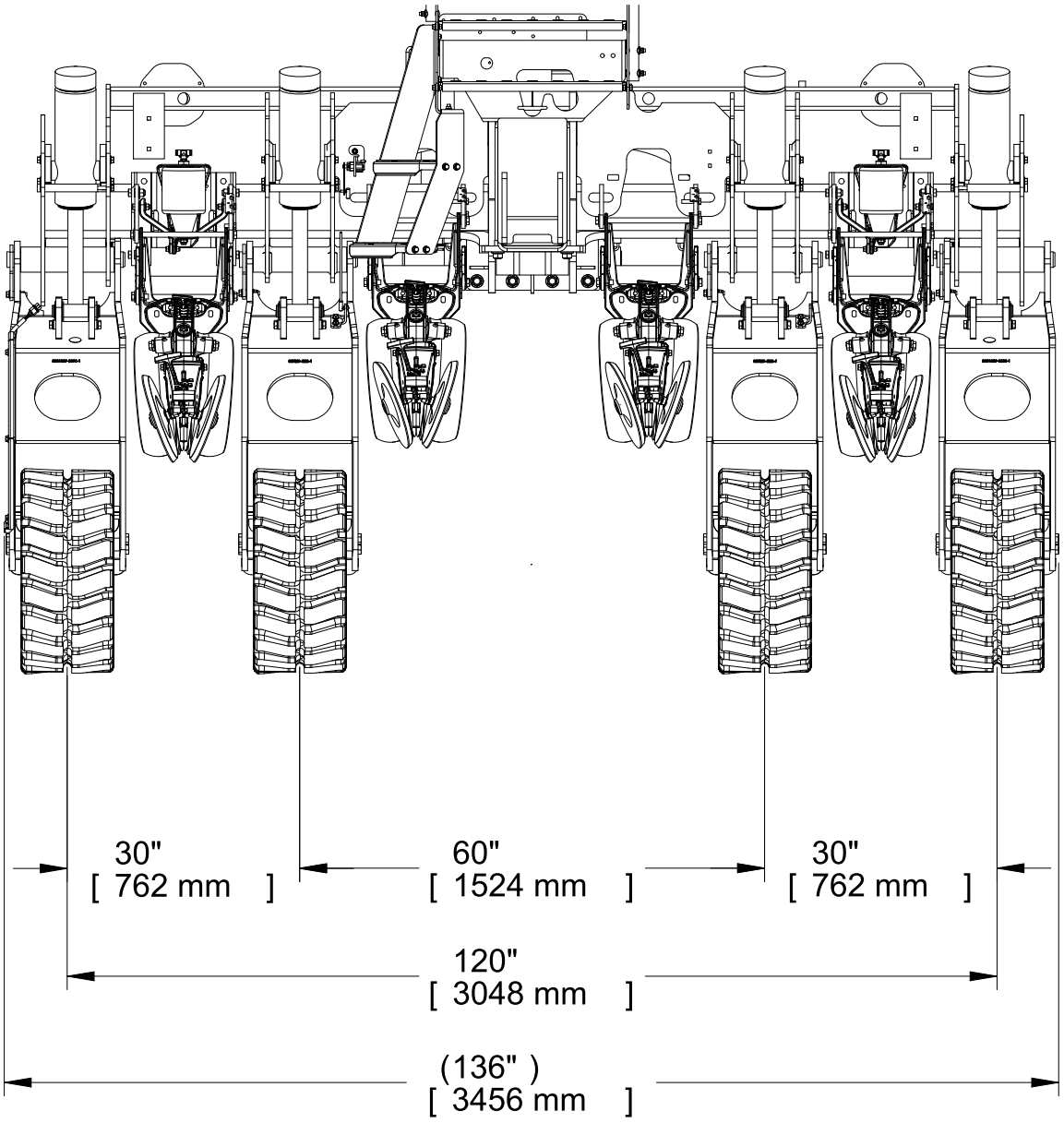

1.4 S-TECH 012P+U GENERAL SPECIFICATIONS

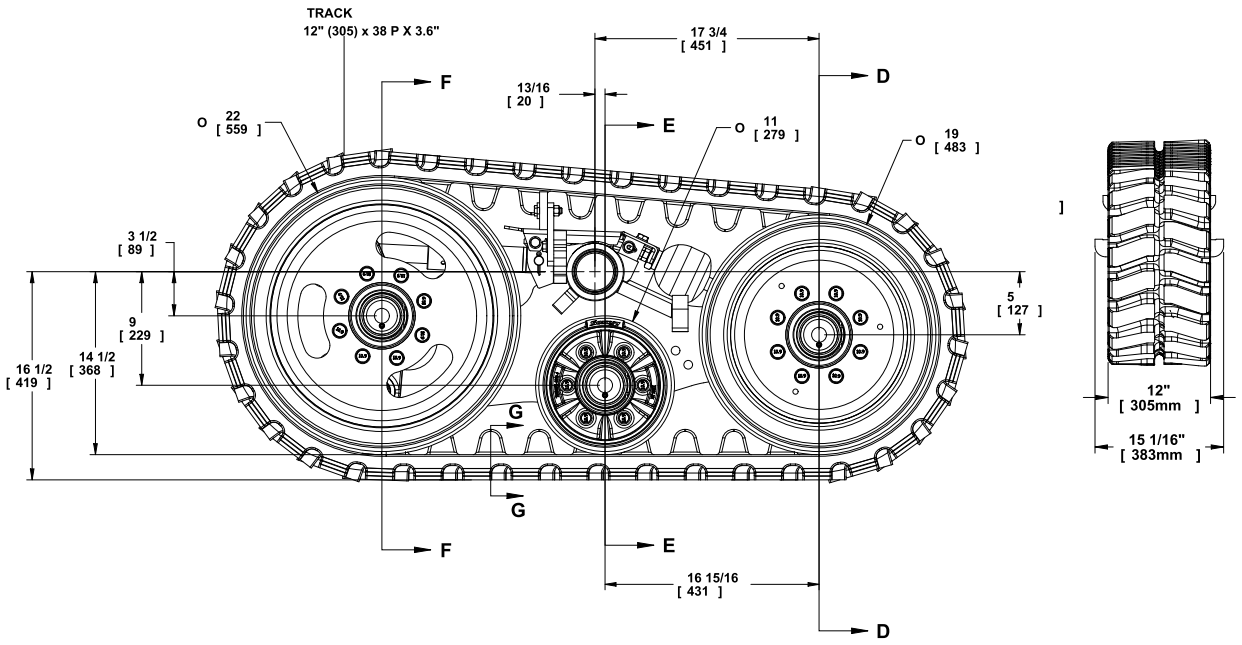

1.5 JD 1770NT AND 1775NT WITH S-TECH 012P – 12 / 16R30 FIELD MODE SPECIFICATIONS

A

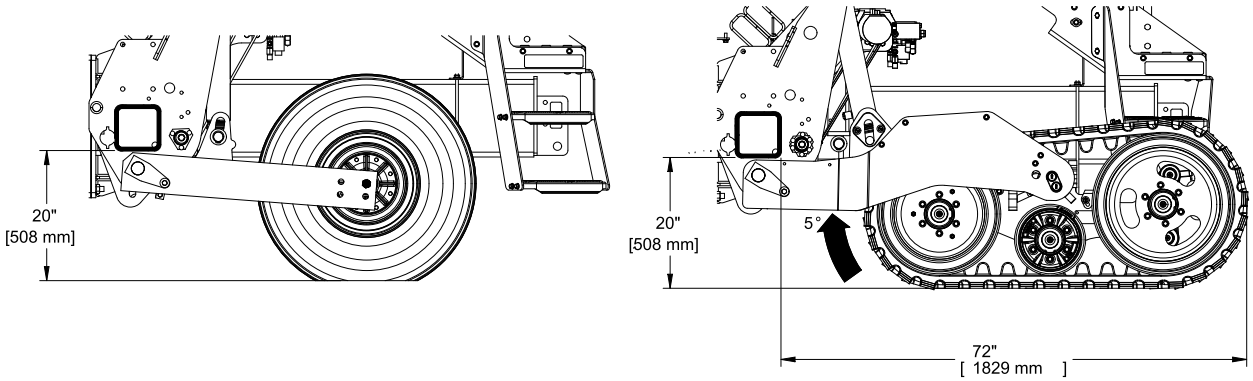

B

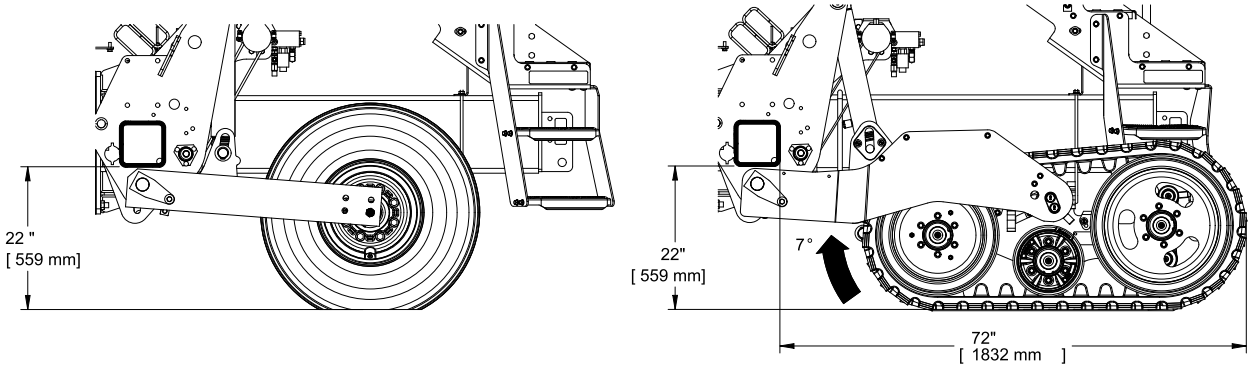

ITEM	DESCRIPTION
A	NORMAL CONDITIONS
B	RAISED FRAME

1.6 JD 1770NT AND 1775NT WITH S-TECH 012P – 12 / 16R30 TRANSPORT MODE SPECIFICATIONS

A

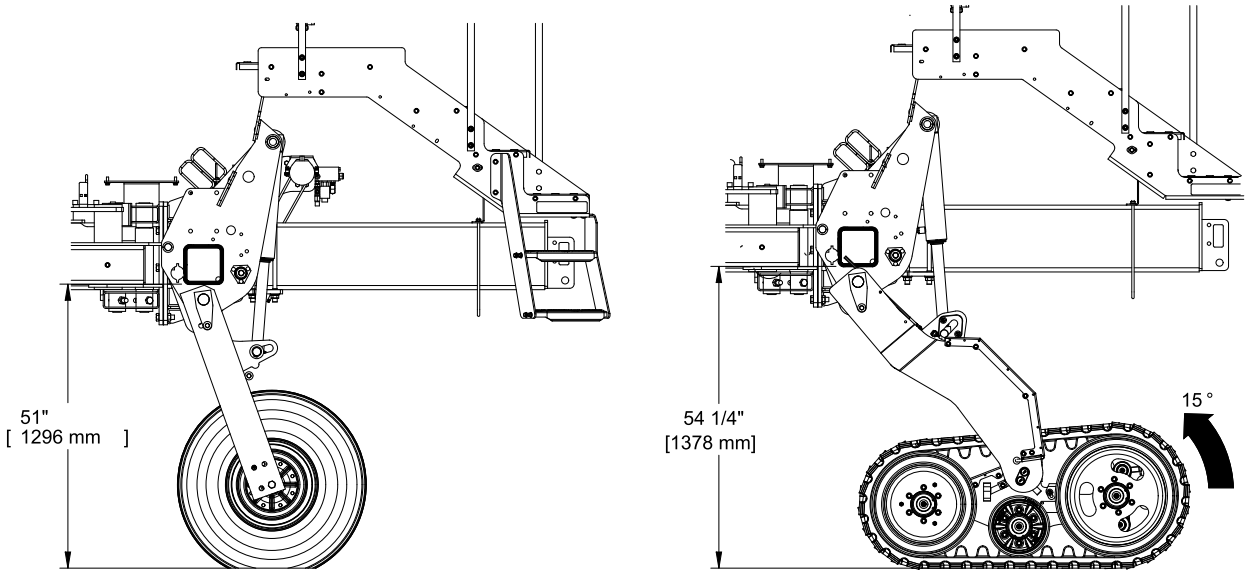

B

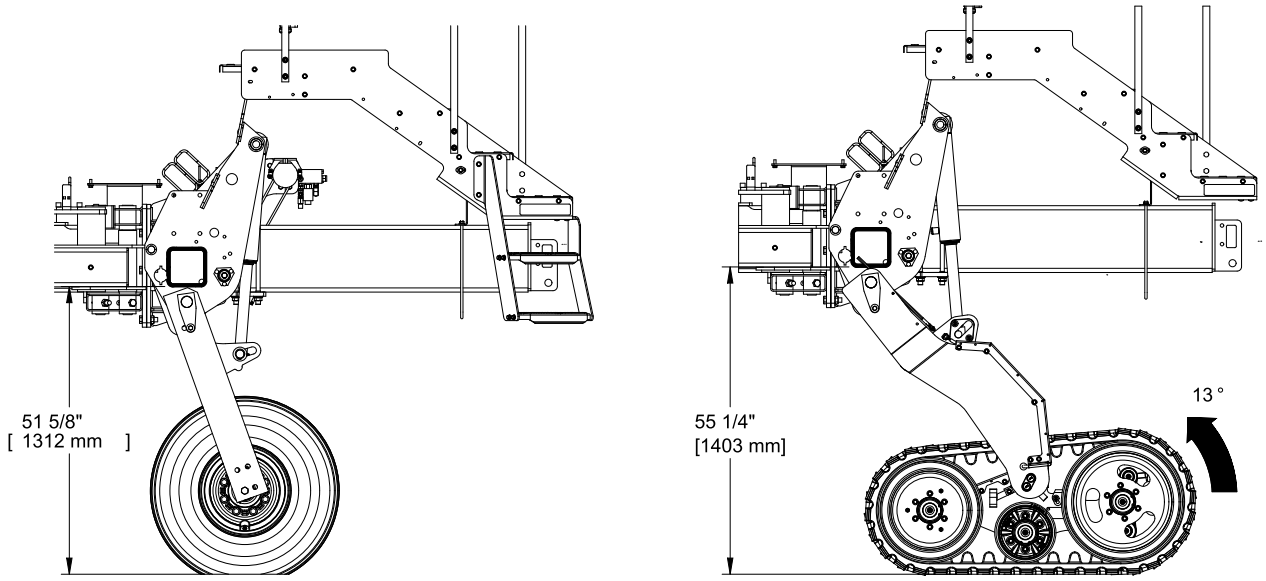

ITEM	DESCRIPTION
A	NORMAL CONDITIONS
B	RAISED FRAME

1.7 JD 1770NT AND 1775NT WITH S-TECH 012P – 24R30 FIELD MODE SPECIFICATIONS

A

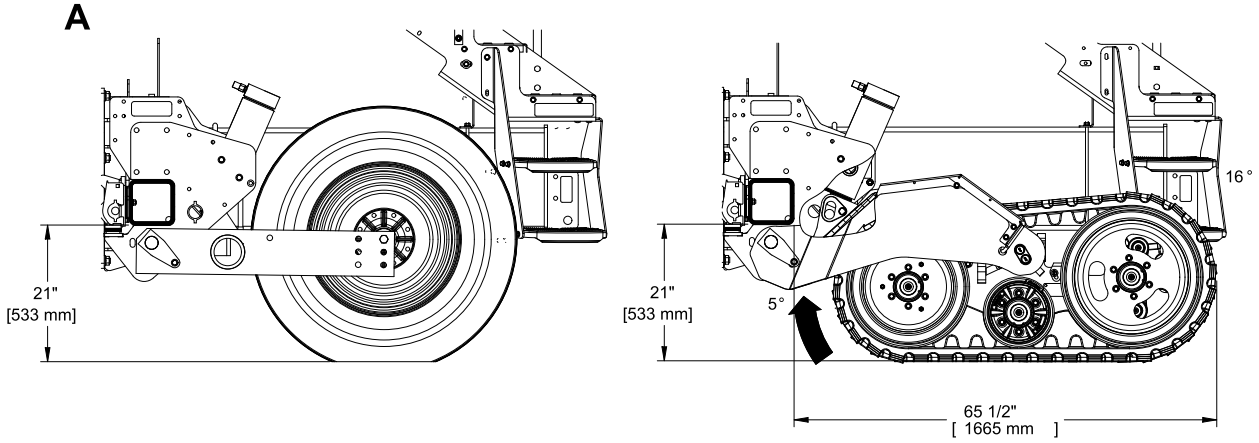

B

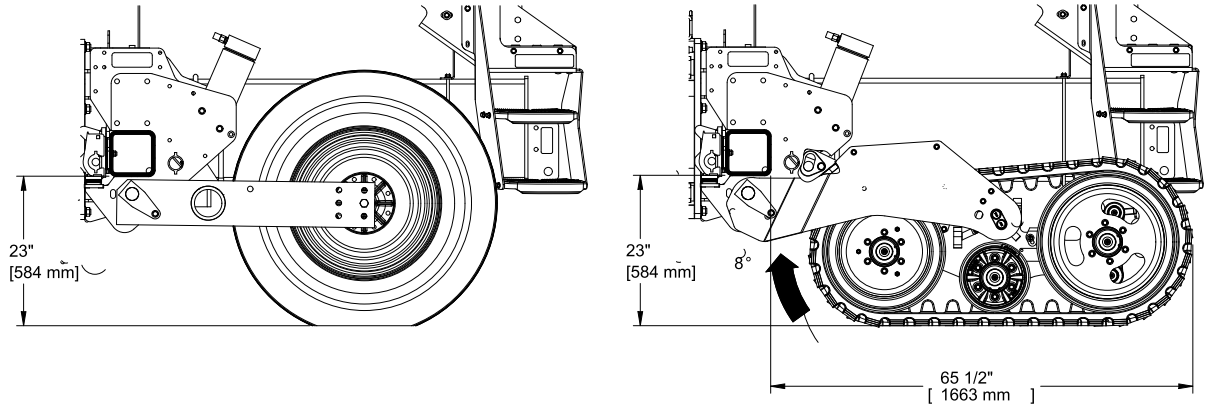

ITEM	DESCRIPTION
A	NORMAL CONDITIONS
B	RAISED FRAME

1.8 JD 1770NT AND 1775NT WITH S-TECH 012P – 24R30 TRANSPORT MODE SPECIFICATIONS

A

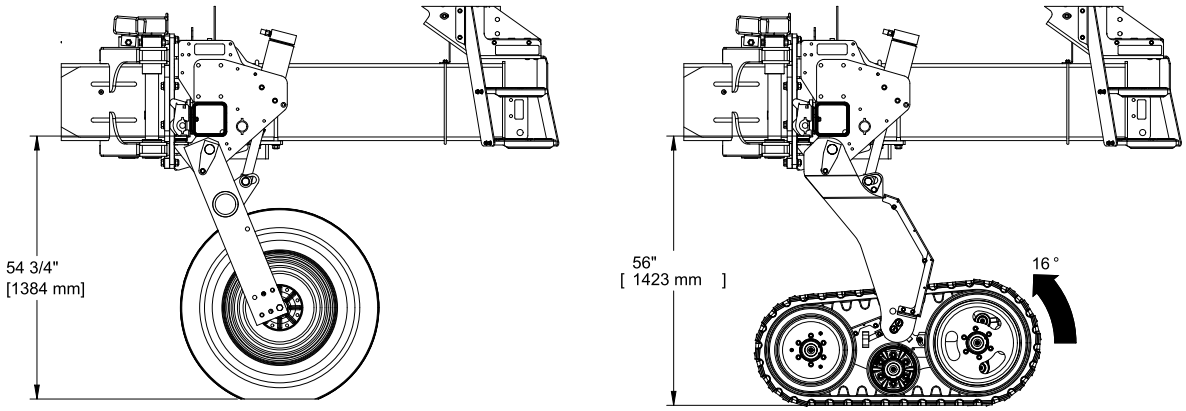

B

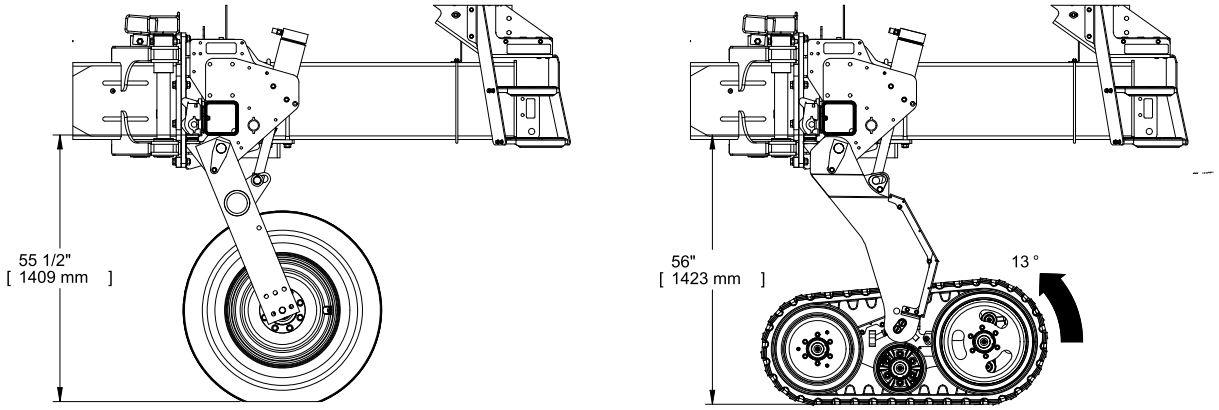

ITEM	DESCRIPTION
A	NORMAL CONDITIONS
B	RAISED FRAME

Page Intentionally Left Blank

SECTION 2 INTRODUCTION

2.1 PRESENTATION

- Please read this guide carefully , it contains the information required to safely install, operate and maintain your Soucy Track system. Failure to do so could result in personal injury or equipment failure.
- Familiarize yourself with the instructions before you proceed with the installation, operation and maintenance of the track system.
- Keep this guide handy while installing, operating, and maintaining your system.
- This equipment shall be used for agricultural operations only. Contact Soucy Track if you wish to use it for other purposes.

NOTICE

THIS GUIDE MAY BE REVISED BASED ON OPERATIONAL EXPERIENCE, FEEDBACK FROM USERS, AND DESIGN IMPROVEMENTS OF THE TRACK SYSTEM.

2.2 HOW TO USE THIS GUIDE

NOTICE

THIS GUIDE REFLECTS THE SYSTEM CONFIGURATION AT TIME OF PRINTING. **PHOTOS AND FIGURES ARE TYPICAL.** SOUCY TRACK RESERVES THE RIGHT TO MODIFY THE SYSTEM AT ANY TIME WITHOUT PRIOR NOTICE. YOUR SYSTEM MAY SLIGHTLY DIFFER FROM THE EQUIPMENT SHOWN.

2.3 SYSTEM DESCRIPTION

- The track system consists of a rubber track supported by a wheeled frame. The pivoting frame is retained by a pin (pivot axle) on a lift-arm safely assembled on the planter centre frame. Movement of the track is made through ground contact.

Figure 2.1 MAIN ASSEMBLY OF S-TECH 012P TRACK SYSTEM / JD 1770NT AND 1775NT

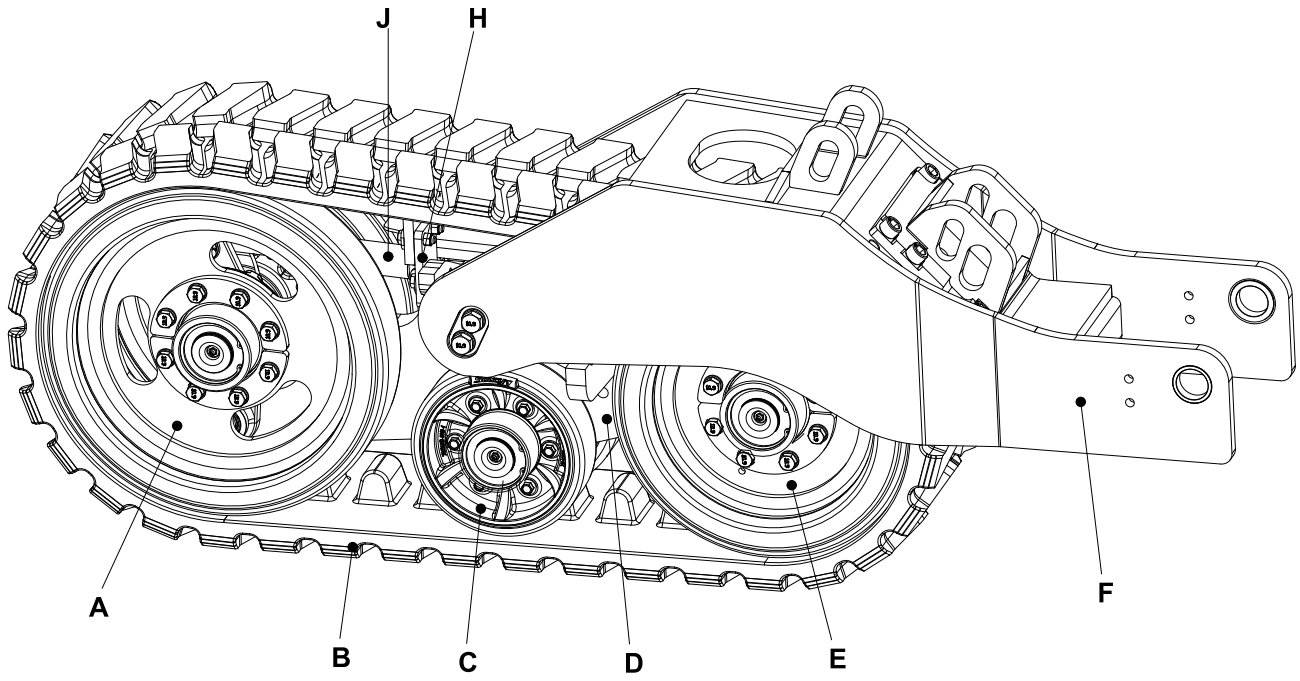

ITEM	DESCRIPTION
A	REAR IDLER WHEEL
B	RUBBER TRACK
C	BOGIE WHEEL
D	UNDERCARRIAGE
E	FRONT IDLER WHEEL
F	LIFT-ARM
G	HEIGHT ADJUSTMENT BLOCK
H	UPPER SCRAPER
J	HYDRAULIC TENSIONER

Figure 2.2 MAIN ASSEMBLY OF S-TECH 012U TRACK SYSTEM

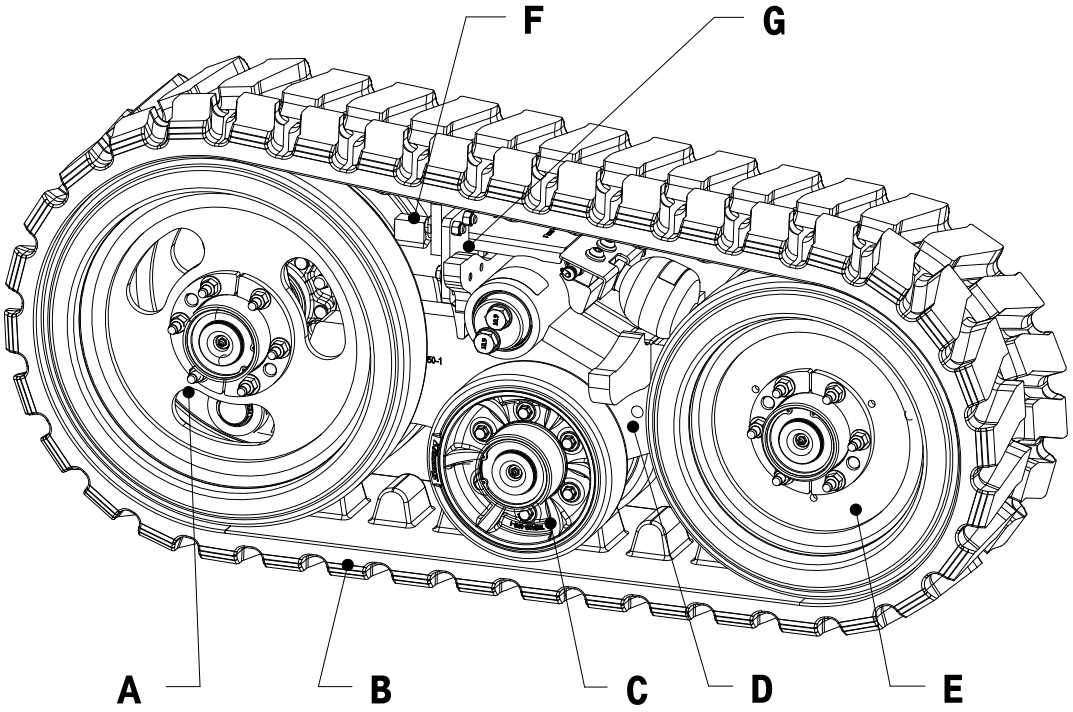

ITEM	DESCRIPTION
A	REAR IDLER WHEEL
B	RUBBER TRACK
C	BOGIE WHEEL
D	UNDERCARRIAGE
E	FRONT IDLER WHEEL
F	UPPER SCRAPER
G	HYDRAULIC TENSIONER

2.4 CLEARANCE REQUIREMENT OF JD 1770NT AND 1775NT WITH S-TECH 012P 12 / 16 AND 24R30

- Check for possible interferences between the tracks and the various accessories used with a planter.
- Due to the numerous attachments and accessories that can be used with planters, Soucy Track cannot guarante that there will be no interference.

NOTICE

THE FOLLOWING PICTURES SHOW THE MINIMUM CLEARANCE REQUIRED.
FOR JD 1770NT AND 1775NT WITH S-TECH 012P

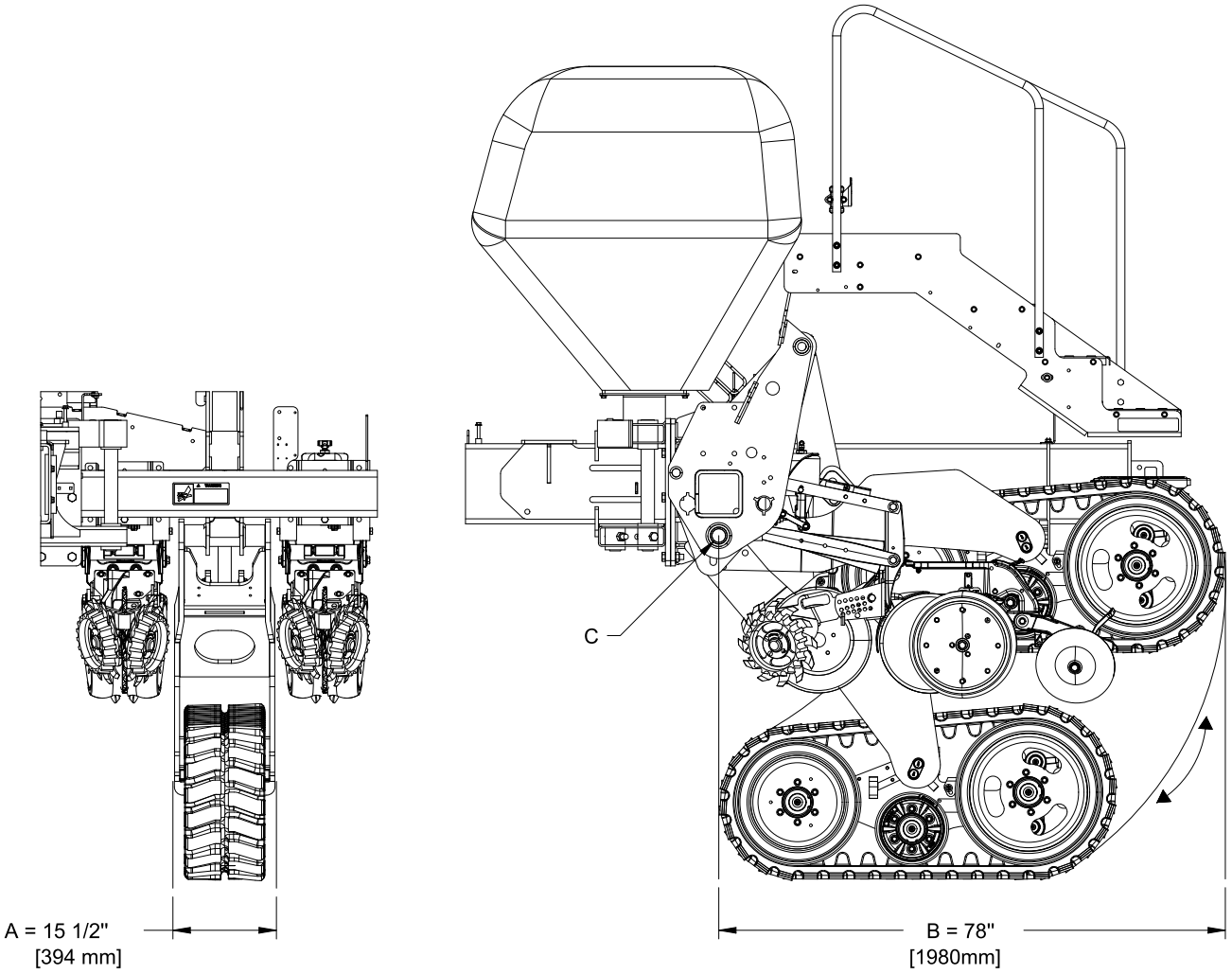

- A: **Minimum clearance** between the rows cleaner and the planting units.
- B: Nothing should be positioned in this cleared zone.
- C: Main pivot on the planter frame.

NOTICE

THE FOLLOWING PICTURES SHOW THE MINIMUM CLEARANCE REQUIRED.
FOR JD 1770NT AND 1775NT WITH S-TECH 012P

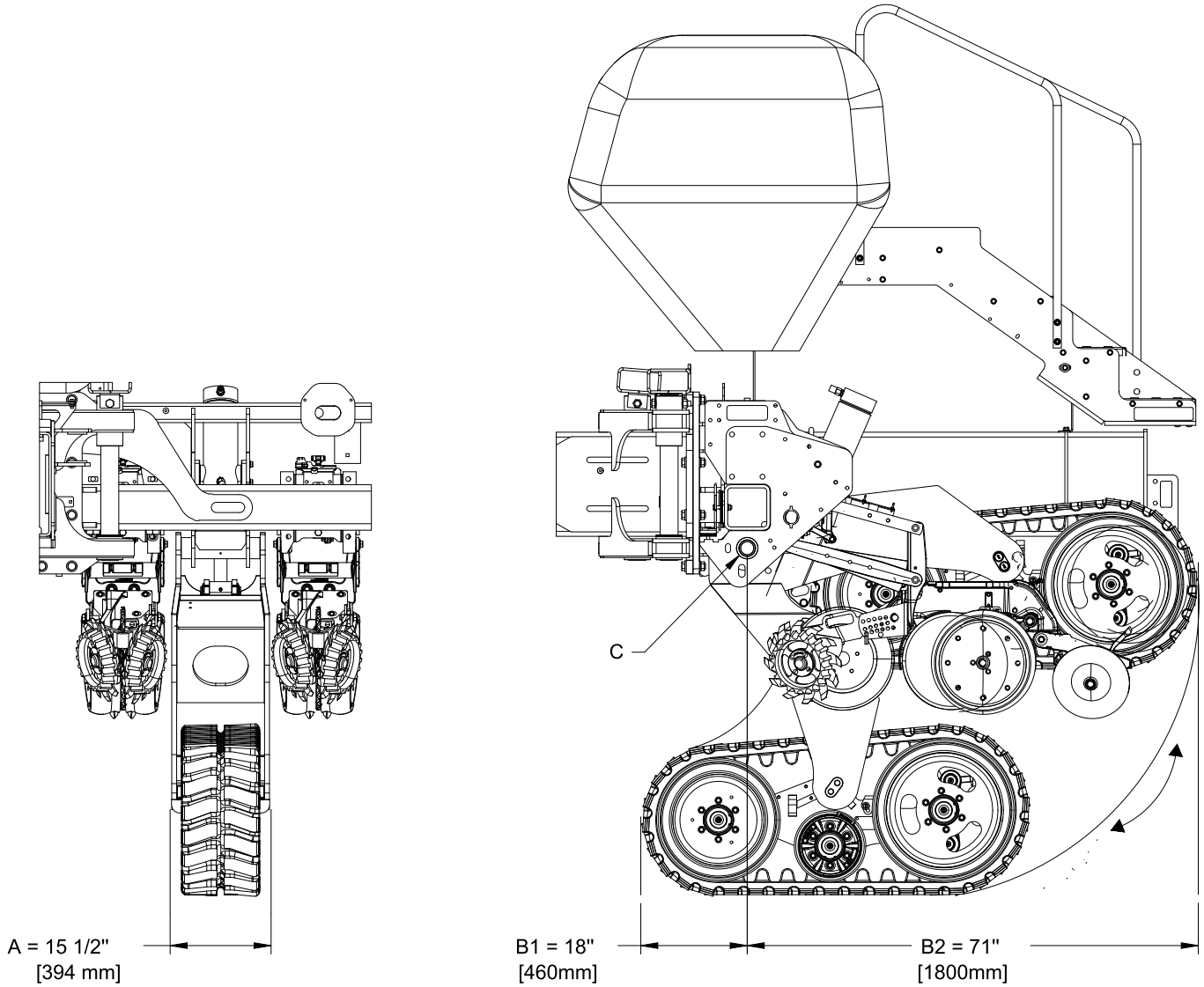

- A: **Minimum clearance** between the rows cleaner and the planting units.
- B: Nothing should be positioned in this cleared zone (B1) and (B2).
- C: Main pivot on the planter frame.

2.5 SERIAL NUMBER AND IDENTIFICATION FOR S-TECH 012P + U

- Each undercarriage comes with two individual serial numbers: frame and track. The frame serial number is located on the identification plate riveted on its side. The track serial number is engraved on the edge of the belting.
- DEALER: Refer to the Track System Registration Form on last page and read the instructions. Then forward the completed form to the Soucy Track Technical Service Department.

Figure 2.3 SERIAL NUMBER AND IDENTIFICATION FOR S-TECH 012P + U

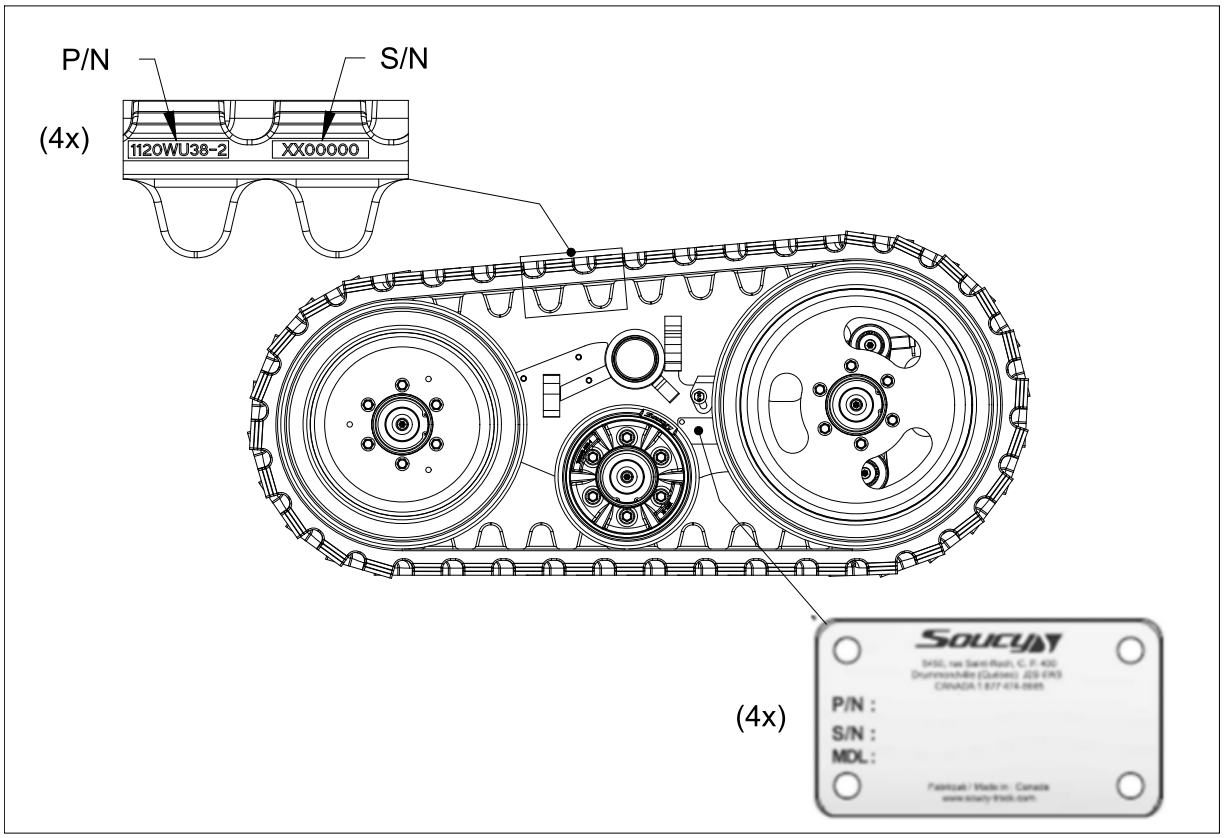

SECTION 3 SAFETY

3.1 GENERAL

⚠ CAUTION ⚠

ONLY QUALIFIED PERSONNEL ARE ALLOWED TO INSTALL, USE AND MAINTAIN THE TRACK SYSTEM.

Figure 3.1 SAFETY ALERT SYMBOL



- The symbol above draws your attention to important instructions concerning your personal safety. Read the accompanying message carefully to avoid personal injury or death.
- Keep this manual in the cab while using the Soucy Track System.
- Always remove key from ignition before working on the vehicle.



3.2 SAFETY SIGNS USED IN THIS GUIDE

- The following signal words are used throughout this guide in accordance with **ANSI Z535.4-2007** (Product Safety Signs and Labels):

EXAMPLE

DANGER

DANGER INDICATES A HAZARDOUS SITUATION WHICH, IF NOT AVOIDED, WILL RESULT IN DEATH OR SERIOUS INJURY;

WARNING

WARNING INDICATES A HAZARDOUS SITUATION WHICH, IF NOT AVOIDED, COULD RESULT IN DEATH OR SERIOUS INJURY;

CAUTION

CAUTION INDICATES A HAZARDOUS SITUATION WHICH, IF NOT AVOIDED, COULD RESULT IN MINOR OR MODERATE INJURY;

NOTICE

NOTICE INDICATES INFORMATION CONSIDERED IMPORTANT, BUT NOT HAZARD-RELATED (E.G., MESSAGES RELATING TO PROPERTY DAMAGE);

3.3 SAFETY INSTRUCTIONS

- Make sure no one is in the danger zone of the vehicle while the engine is running or the vehicle is moving.
- Read your vehicle owner's manual before you use it with Soucy Track systems.
- Check that safety LABELs are intact and visible. Replace damaged or illegible LABELS.
- Read the installation, operation and maintenance guide of your Soucy Track system before installing and operating your system.
- Make sure the lifting equipment has the capacity to keep the vehicle stable during installation of the system. Inadequate lifting equipment can lead to unstable vehicle that can cause severe injuries or death.
- Check tightening of bolts and nuts after the first two hours of use. Loosened hardware can lead to damaged components, detracking, severe injuries, or death

Figure 3.2 CRUSHING RISK ZONES / ALL MODELS

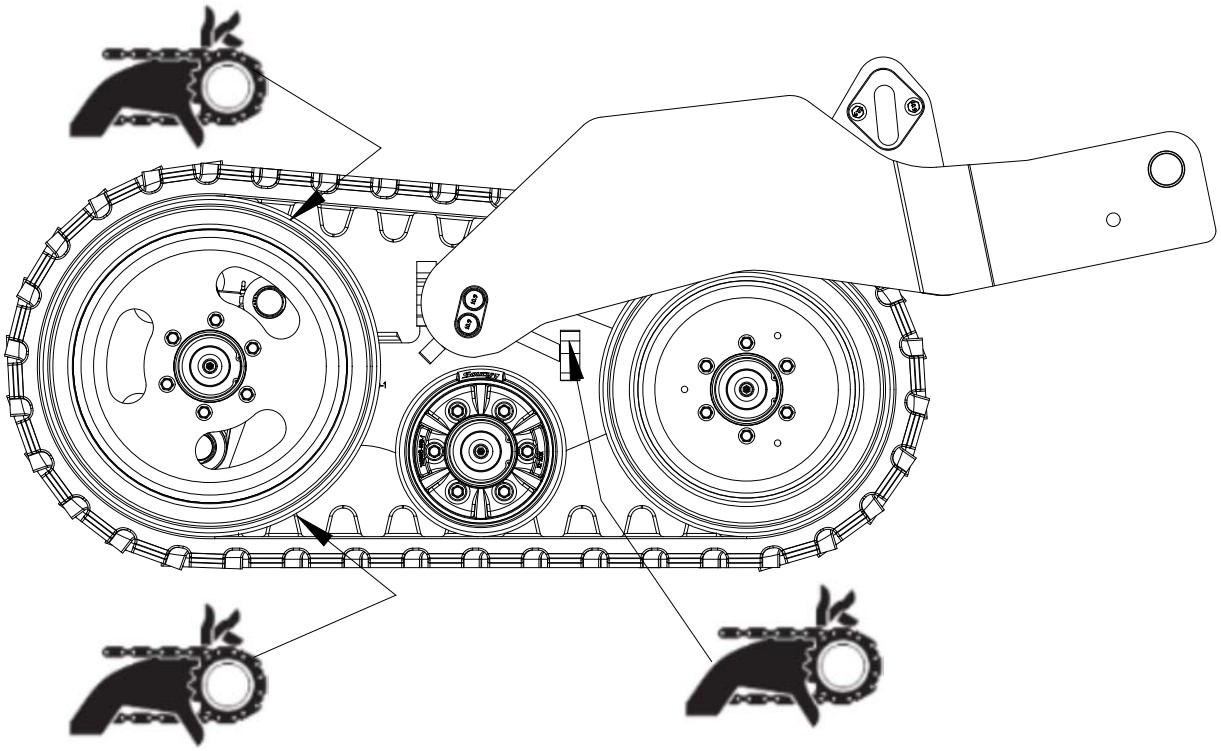

⚠ WARNING ⚠

- **DO NOT INSTALL OR OPERATE THE TRACK SYSTEM WITH DAMAGED COMPONENTS OR BROKEN OR MISSING HARDWARE.**
- **HEAVY PARTS CAN CAUSE INJURIES. TWO PEOPLE ARE REQUIRED FOR ASSEMBLY AND REMOVAL OF THE SOUCY TRACK SYSTEM. USE A JACK, A FORKLIFT OR A HOIST TO HANDLE THE SYSTEM AND SUB-ASSEMBLIES.**

DANGER

ALWAYS RELEASE THE PRESSURE WHEN DISASSEMBLING ANY HYDRAULIC CYLINDER. NOT RELEASING THE PRESSURE MAY LEAD THE CYLINDER TO EJECT WITH GREAT FORCE AND CAUSE MAJOR INJURIES OR DEATH.

Figure 3.3 SAMPLE CYLINDERS

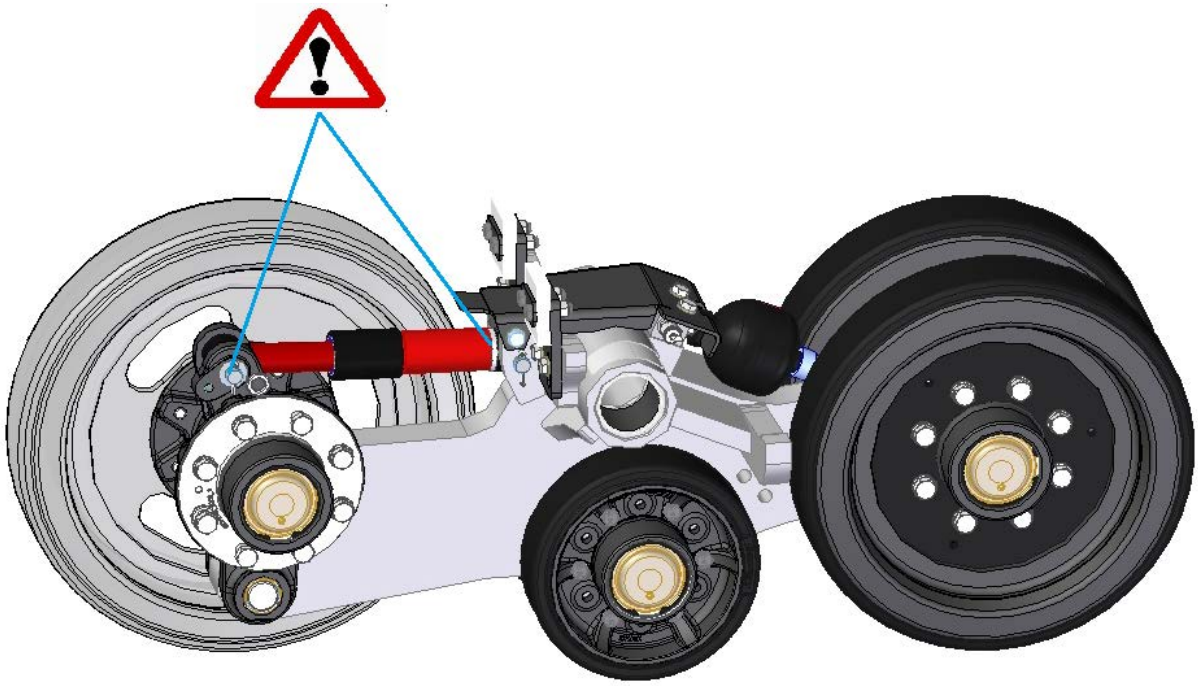

3.4 SAFETY LABELS

- Replace any missing, damaged or illegible labels.

Figure 3.4 SAMPLE

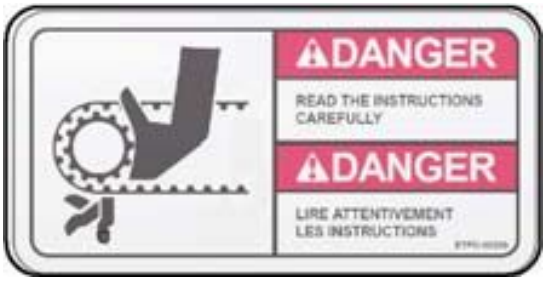



Page Intentionally Left Blank

SECTION 4 PARTS CATALOG OF THE TRACK SYSTEM S-TECH 012P

4.1 TRACK SYSTEM S-TECH 012P 24R30 RIGHT (8032009-0070-4)

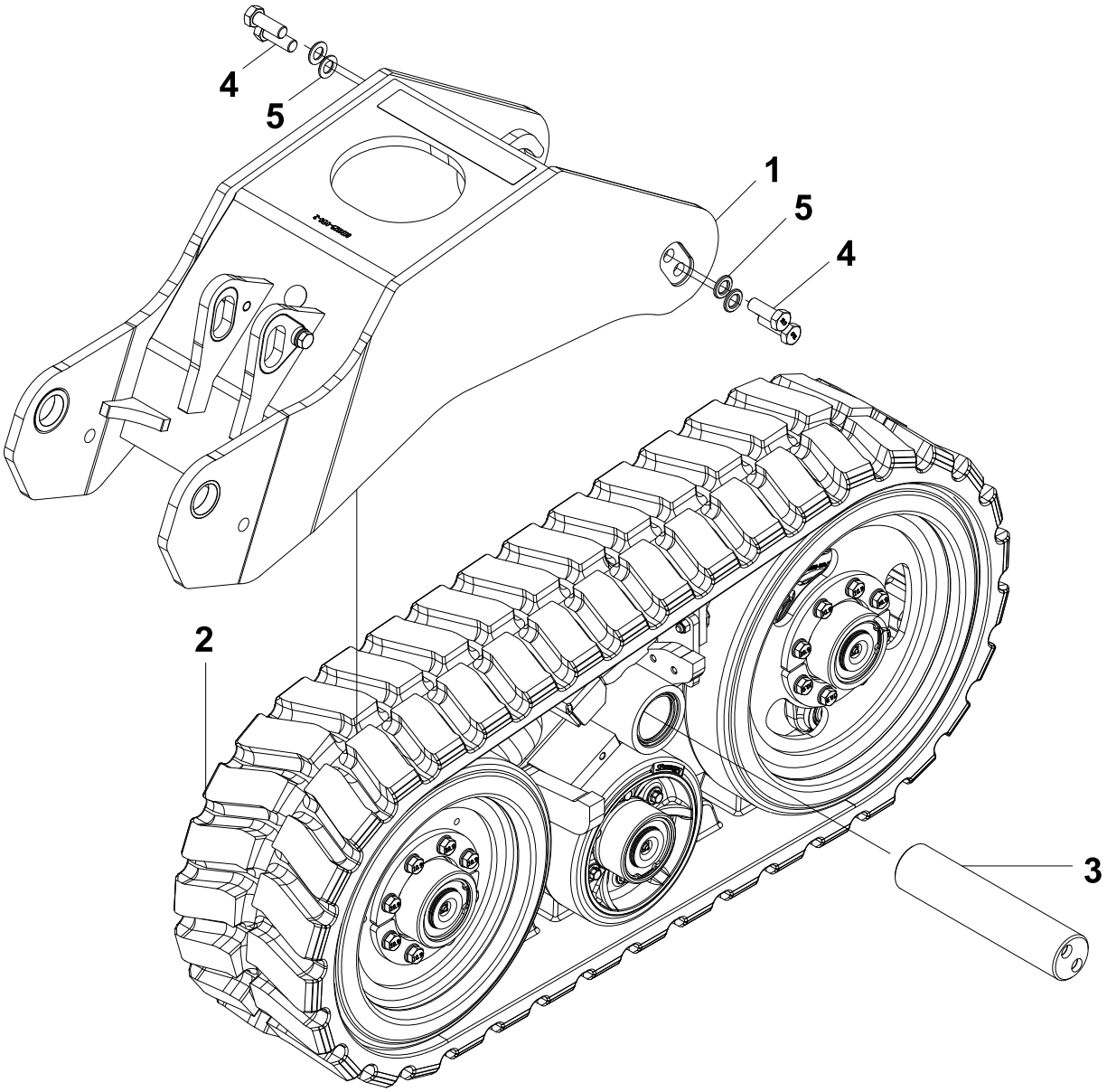

ITEM	PART #	QTY	DESCRIPTION
1	8031029-0380-1	1	LIFT ARM 24 ROWS - RIGHT ASSEMBLY
2	8032009-0120-5	1	UNDERCARRIAGE ASSEMBLY S-TECH 012P
3	8032009-0130-1	1	PIVOT AXLE
4	S1111-20055-0F7	4	HEX BOLT. ZnNi CL10.9 M20-2.5 X 55MM
5	S4612-M2000-0HG	4	HARDENED GALV. M20 FLAT WASHER

4.2 TRACK SYSTEM S-TECH 012P 24R30 LEFT (8032009-0080-4)

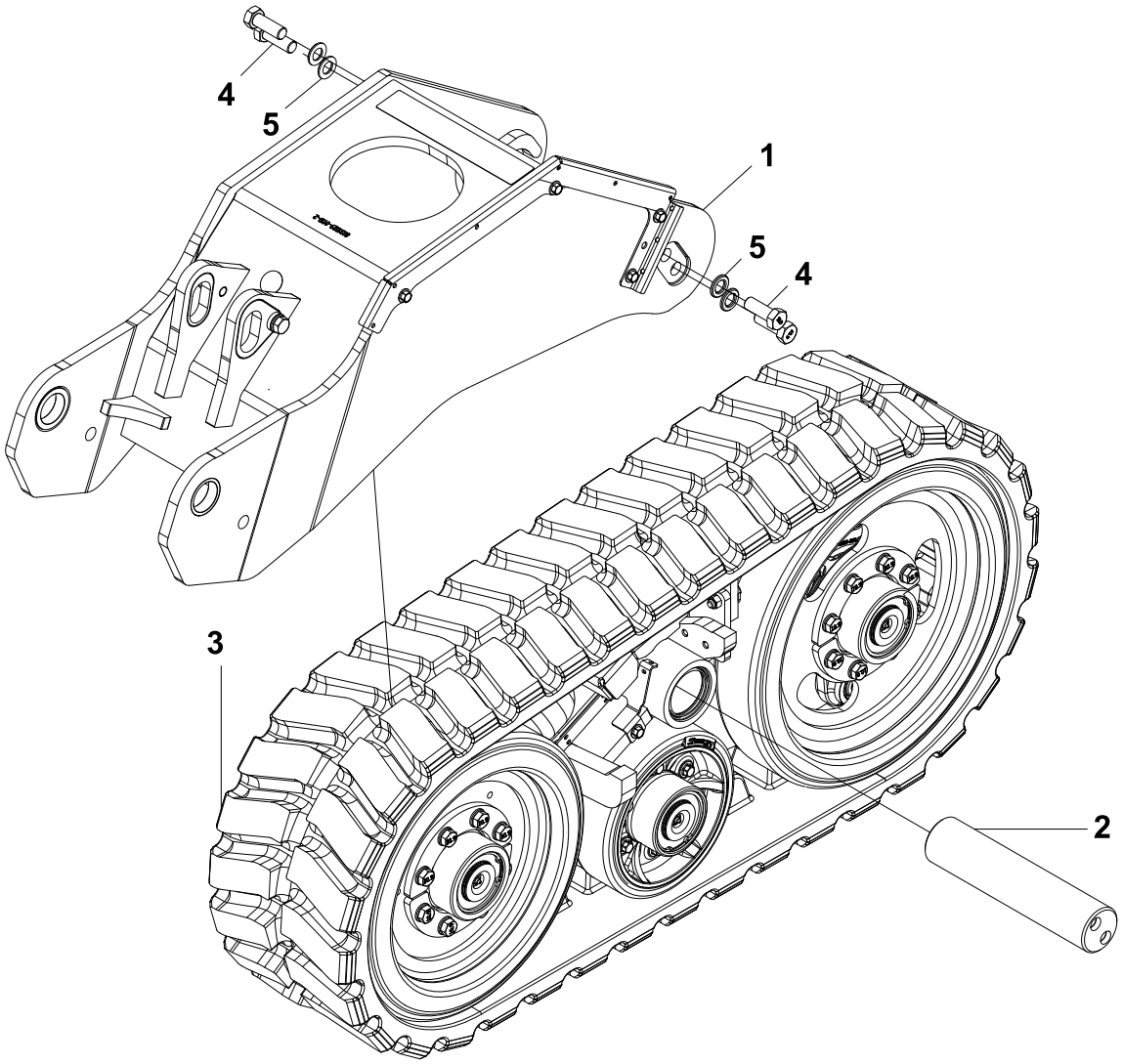

ITEM	PART #	QTY	DESCRIPTION
1	8031029-0390-1	1	LIFT ARM 24 ROWS - LEFT ASSEMBLY
2	8032009-0130-1	1	PIVOT AXLE
3	8032009-0370-5	1	UNDERCARRIAGE ASSEMBLY S-TECH 012P
4	S1111-20055-0F7	4	HEX BOLT. ZnNi CL10.9 M20-2.5 X 55MM
5	S4612-M2000-0HG	4	HARDENED GALV. M20 FLAT WASHER

4.3 TRACK SYSTEM S-TECH 012P 24R30 CENTRE (8032009-0380-4)

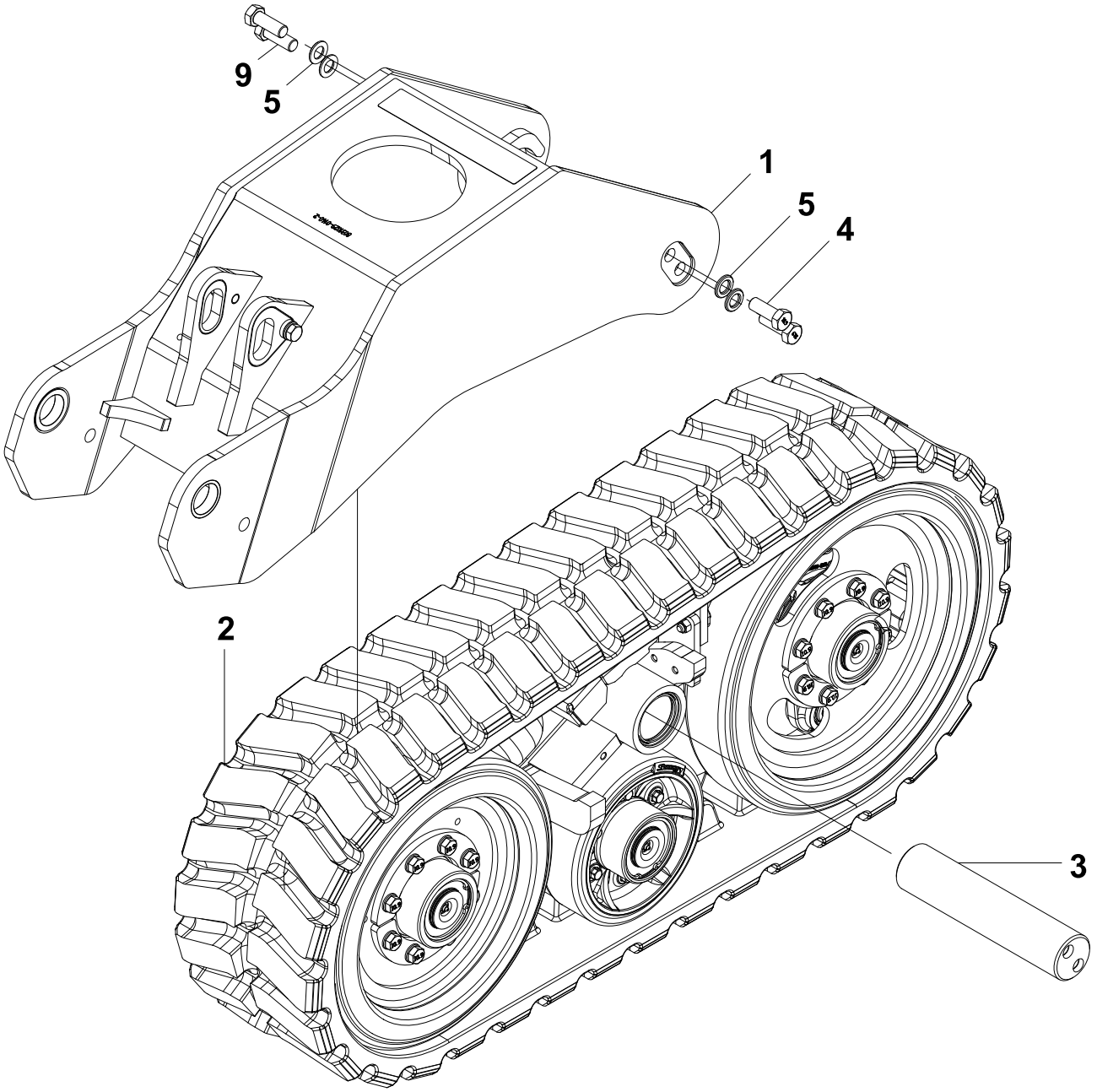

ITEM	PART #	QTY	DESCRIPTION
1	8031029-0400-1	1	LIFT ARM 24 ROWS - CENTER ASSEMBLY
2	8032009-0120-5	1	UNDERCARRIAGE ASSEMBLY S-TECH 012P
3	8032009-0130-1	1	PIVOT AXLE
4	S1111-20055-0F7	4	HEX BOLT. ZnNi CL10.9 M20-2.5 X 55MM
5	S4612-M2000-0HG	4	HARDENED GALV. M20 FLAT WASHER

4.4 LIFT ARM 24 ROWS - CENTER ASSEMBLY (8031029-0400-1)

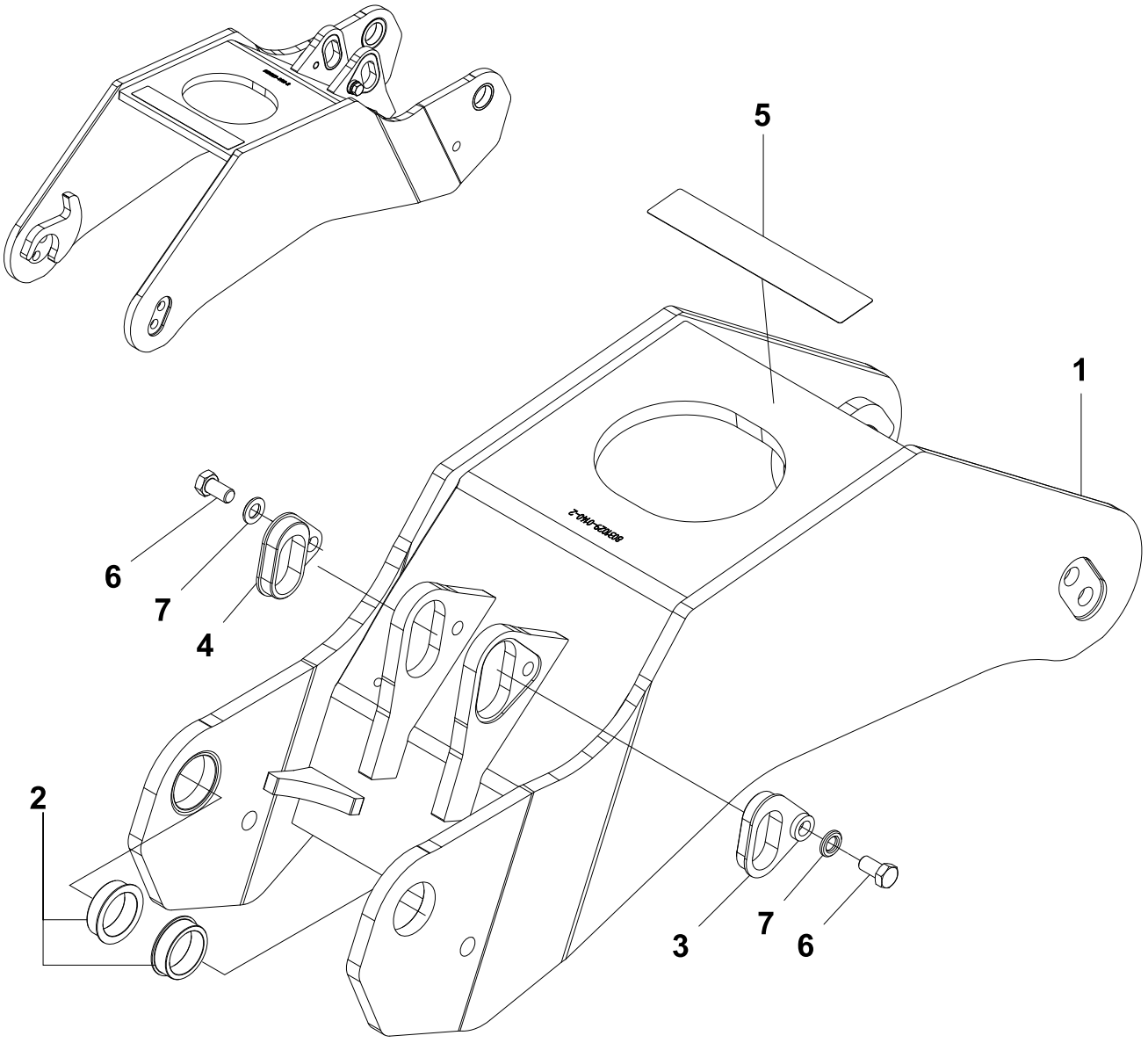

ITEM	PART #	QTY	DESCRIPTION
1	8031029-0140-2	1	LIFT ARM 24 ROWS - CENTER PAINTED
2	8031029-0240-2	2	SLEEVE LIFT ARM
3	8031029-0300-1	1	CLAMP BLOCK 2 -MACHINED
4	8031029-0310-1	1	CLAMP BLOCK 1 - MACHINED
5	ETSI-00370	1	SOUCY LABEL
6	S1131-16030-0F7	2	HEX. BOLT ZnNi. CL.10.9 M16-2.0 X 30MM F.P.L
7	S4612-M1600-0BG	2	HARDENED GALV. M16 FLAT WASHER

4.5 LIFT ARM 24 ROWS - RIGHT ASSEMBLY (8031029-0380-1)

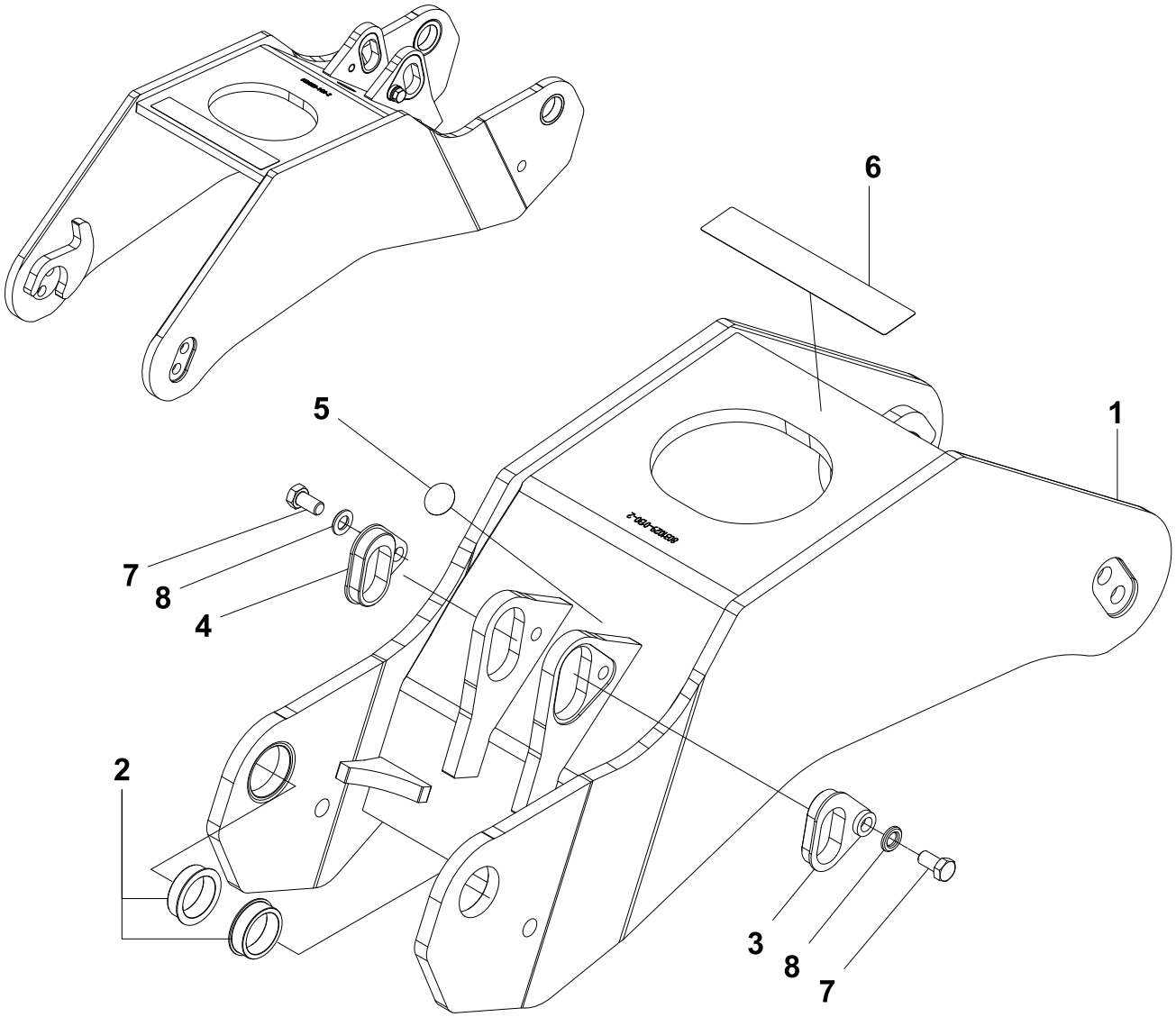

ITEM	PART #	QTY	DESCRIPTION
1	8031029-0130-2	1	LIFT ARM 24 ROWS - RIGHT PAINTED
2	8031029-0240-2	2	SLEEVE LIFT ARM
3	8031029-0300-1	1	CLAMP BLOCK 2 -MACHINED
4	8031029-0310-1	1	CLAMP BLOCK 1 - MACHINED
5	ETSI-00220	1	RIGHT LABEL
6	ETSI-00370	1	SOUCY LABEL
7	S1131-16030-0F7	2	HEX. BOLT ZnNi. CL.10.9 M16-2.0 X 30MM F.P.L
8	S4612-M1600-0BG	2	HARDENED GALV. M16 FLAT WASHER

4.6 LIFT ARM 24 ROWS - LEFT ASSEMBLY (8031029-0390-1)

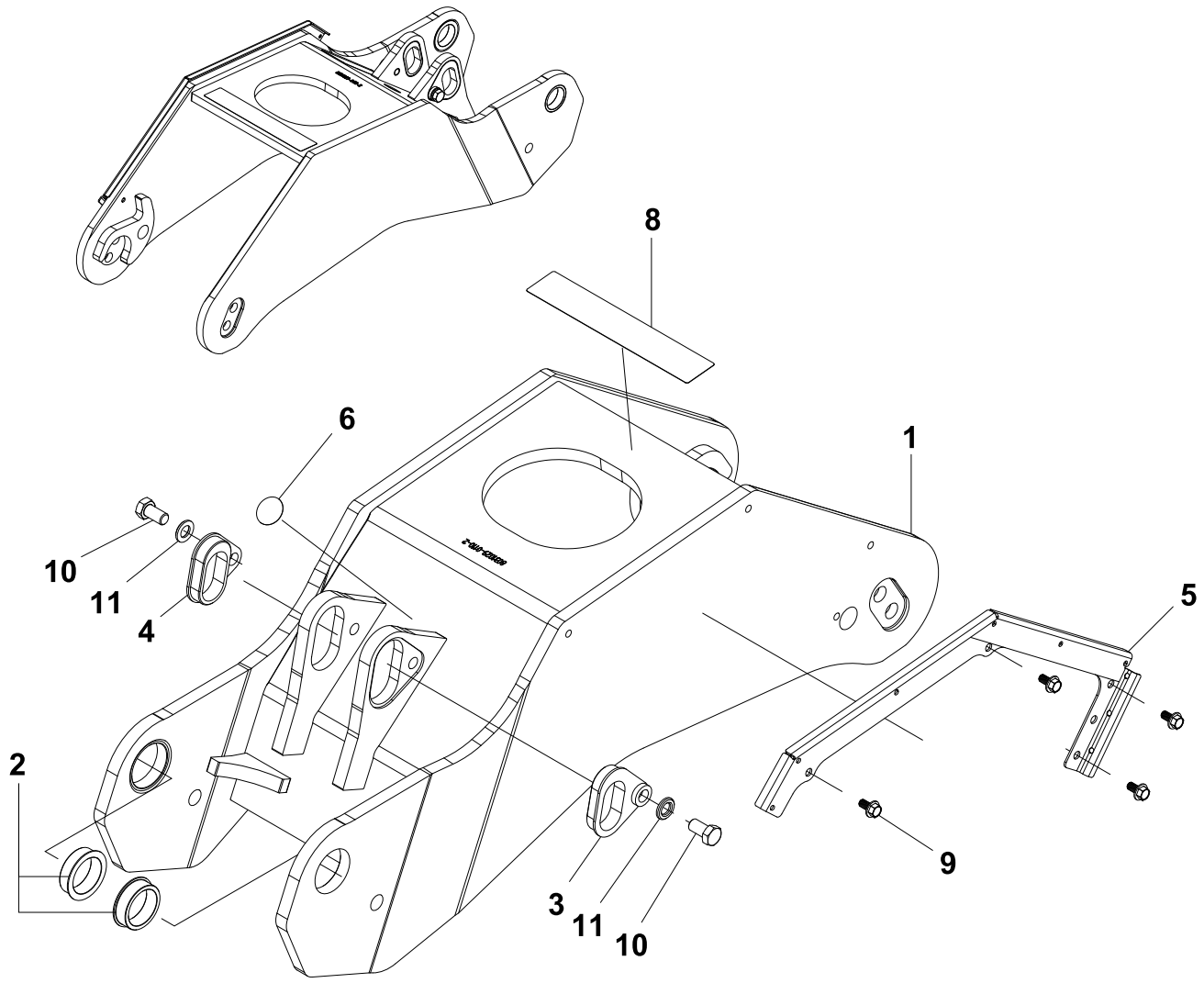

ITEM	PART #	QTY	DESCRIPTION
1	8031029-0110-2	1	LIFT ARM 24 ROWS - LEFT PAINTED
2	8031029-0240-2	2	SLEEVE LIFT ARM
3	8031029-0300-1	1	CLAMP BLOCK 2 -MACHINED
4	8031029-0310-1	1	CLAMP BLOCK 1 - MACHINED
5	8031029-0330-1	1	WIRE PROTECTOR - PAINTED
6	ETSI-00210	1	LEFT LABEL
8	ETSI-00370	1	SOUCY LABEL
9	S1114-10020-1D7	4	HEX. FLANGE BOLT GR8.8 ZnNi M10-1.5 X 20 (DIN 6921)
10	S1131-16030-0F7	2	HEX. BOLT ZnNi. CL.10.9 M16-2.0 X 30MM F.P.L
11	S4612-M1600-0BG	2	HARDENED GALV. M16 FLAT WASHER

4.7 UNDERCARRIAGE ASSEMBLY OF S-TECH 012P + U (8032009-0120-5)

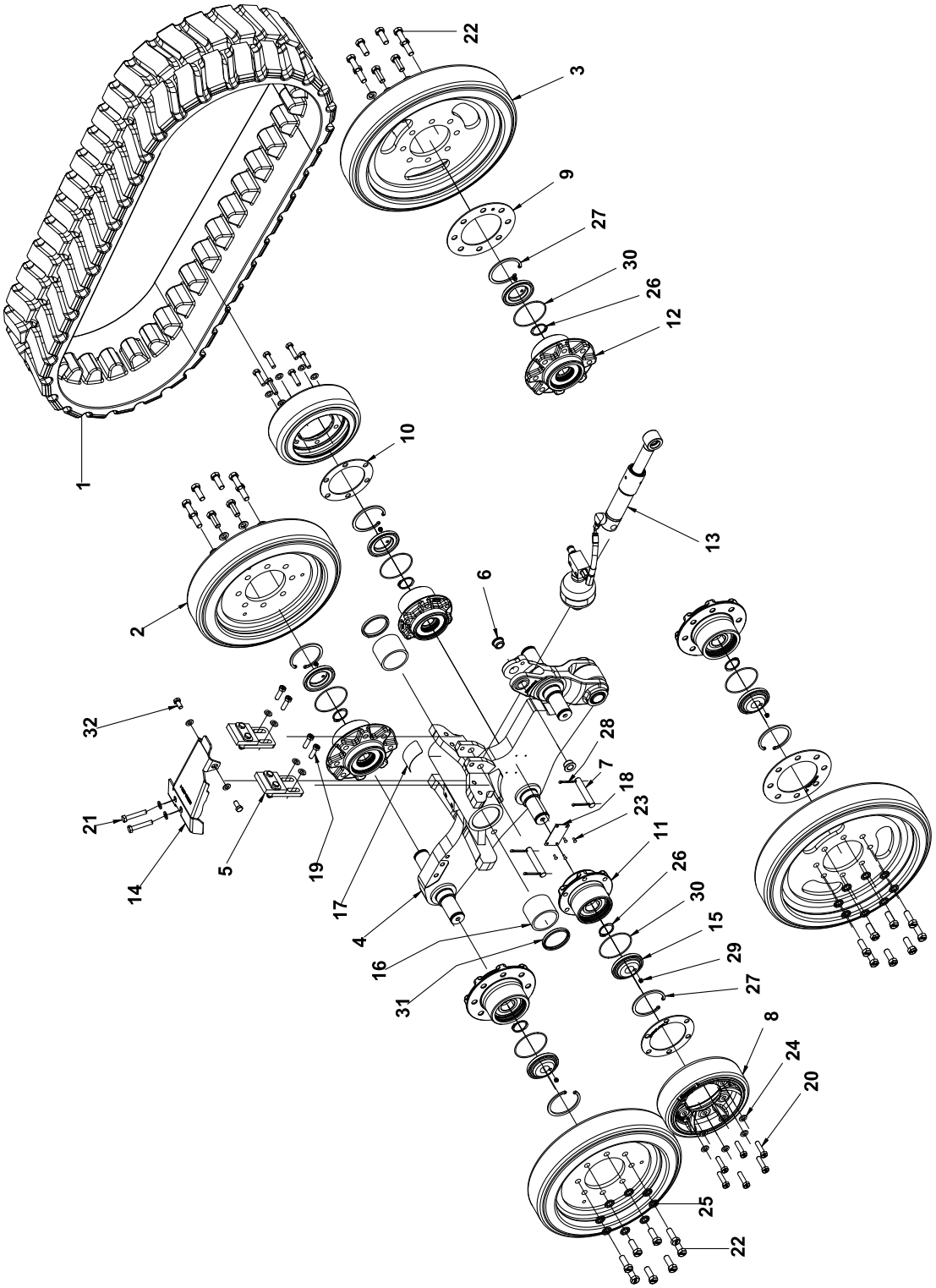

Table 4.1 UNDERCARRIAGE ASSEMBLY OF S-TECH 012P + U (8032009-0120-5)

ITEM	PART #	QTY	DESCRIPTION
1	1120WU38-2	1	AG 12 X 38P X 3 60 - 1 00 CHEVRON W FLEX
2	4400271-20	2	19in IDLER WHEEL-GEN3
3	4400272-20	2	22in IDLER WHEEL-GEN3
4	8032009-0320-4	1	UNDERCARRIAGE S-TECH 012P - PRE-ASSEMBLY
5	8032009-0590-1	2	UPPER SCRAPER
6	8032009-1111-1	2	CYLINDER SLEEVE
7	8032009-1116-1	2	CYLINDER AXLE ON FRAME
8	8034013-0050-1	2	11 IN MIDROLLER - GLUING
9	8034013-0250-1	2	REAR IDLER SHIM
10	8034013-0260-1	2	REAR IDLER AND SUPPORT WHEEL SHIM
11	8034013-0360-1	2	WHEEL HUB - ASSEMBLY
12	8034013-0410-1	4	IDLER WHEEL HUB - ASSEMBLY
13	8035008-0010-4	1	HYDRAULIC SYSTEM
14	8035008-0070-2	1	PROTECTION PLATE
15	8184010-0050-1	6	HUB CAP - MACHINED - BLACK
16	CB4856-042-GM	2	GAR-MAX BUSHING 3.0 X 3.5 X 2.625
17	ETPO-00220	1	DANGER DECAL
18	PLAQUE-SIGNAL	1	NAMEPLATE
19	S1111-12040-0D1	4	HEX. BOLT CL.8.8 ZINC PLATED M12 X 1.75 X 40 (DIN 931)
20	S1111-12050-0F1	12	HEX. B. GR10.9 ZP M12-1.75 X 50MM (DIN 931)
21	S1111-12070-0D1	2	HEX. BOLT CL8.8 ZINC PLATED M12-1.75 X 70 (DIN931)
22	S1111-16045-0F1	32	HEX. BOLT CL.10.9 M16-2.0 X 30 (DIN 931)
23	S351D-10F04-100	4	STAINLESS STEEL DRIVE SCREW 10 GA X 1/2" LG
24	S4612-M1200-0A1	20	FLAT WASHER M12 ZINC PLATED (DIN 125)
25	S4612-M1600-0BG	32	HARDENED GALV. M16 FLAT WASHER
26	S5211-10006-004	6	SNAP RING D1460-0450 DIA. 1.772"
27	S5212-10023-004	6	102mm NOM. DIA INTERNAL RETAINING RING
28	S5334-M0540-600	4	COTTER PIN STAINL 5MM X 40 MM 18-8
29	S6484-00007-000	6	SOCKET PLUG M10 X 1.0 TAPER THREAD
30	S6701-00013-000	6	O-RING 4.0 X 4.25 X 0.139"
31	S6711-00008-000	2	RADIAL SEAL(R.WIPER AU/STEEL)3.0X3.5X.312
32	SM120-025-101F01-0016	2	FUL. TH. HEX.B. 10.9 M12-1.75X25

4.8 UNDERCARRIAGE ASSEMBLY WITH SENSORS OF S-TECH 012P (8032009-0370-5)

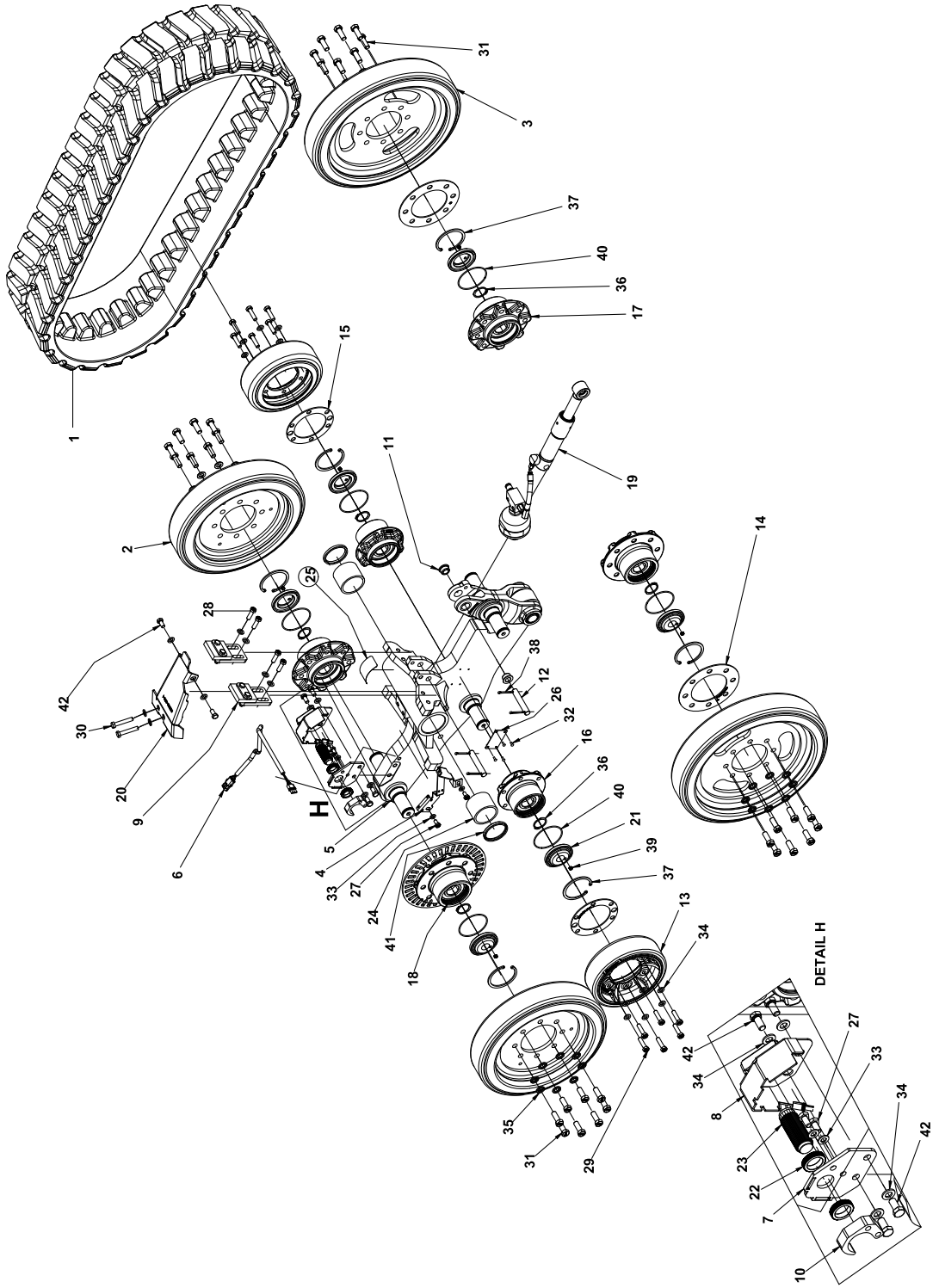

Table 4.2 UNDERCARRIAGE ASSEMBLY WITH SENSORS OF S-TECH 012P (8032009-0370-5)

ITEM	PART #	QTY	DESCRIPTION
1	1120WU38-2	1	AG 12 X 38P X 3 60 - 1 00 CHEVRON W FLEX
2	4400271-20	2	19in IDLER WHEEL-GEN3
3	4400272-20	2	22in IDLER WHEEL-GEN3
4	8032009-0300-2	1	WIRE PROTECTOR
5	8032009-0320-4	1	UNDERCARRIAGE S-TECH 012P - PRE-ASSEMBLY
6	8032009-0400-1	1	WIRE 3 COLOR 16 GA
7	8032009-0410-2	1	MOTION SENSOR PLATE
8	8032009-0550-2	1	MOTION SENSOR COVER
9	8032009-0590-1	2	UPPER SCRAPER
10	8032009-0610-1	1	MOTION SENSOR PROTECTOR
11	8032009-1111-1	2	CYLINDER SLEEVE
12	8032009-1116-1	2	CYLINDER AXLE ON FRAME
13	8034013-0050-1	2	11 IN MIDROLLER - GLUING
14	8034013-0250-1	2	REAR IDLER SHIM
15	8034013-0260-1	2	REAR IDLER AND SUPPORT WHEEL SHIM
16	8034013-0360-1	2	WHEEL HUB - ASSEMBLY
17	8034013-0410-1	3	IDLER WHEEL HUB - ASSEMBLY
18	8034013-0430-1	1	MODIFIED IDLER WHEEL HUB - ASSEMBLY
19	8035008-0010-4	1	HYDRAULIC SYSTEM
20	8035008-0070-2	1	PROTECTION PLATE
21	8184010-0050-1	6	HUB CAP - MACHINED - BLACK
22	A61237	2	NUT, ROUND-1.25-12UNF-SENSOR
23	AA47936	1	OEM JD SENSOR
24	CB4856-042-GM	2	GAR-MAX BUSHING 3.0 X 3.5 X 2.625
25	ETPO-00220	1	DANGER DECAL
26	PLAQUE-SIGNAL	1	NAMEPLATE
27	S1111-12050-0F1	12	HEX. B. GR10.9 ZP M12-1.75 X 50MM (DIN 931)
28	S1111-10020-0D1	4	HEX. BOLT CL8.8 ZINC PLATED M10-1.5 X 20 (DIN 931)
29	S1111-12040-0D1	4	HEX. BOLT CL.8.8 ZINC PLATED M12 X 1.75 X 40 (DIN 931)
30	S1111-12070-0D1	2	HEX. BOLT CL8.8 ZINC PLATED M12-1.75 X 70 (DIN931)
31	S1111-16045-0F1	32	HEX. BOLT CL.10.9 M16-2.0 X 30 (DIN 931)
32	S351D-10F04-100	4	STAINLESS STEEL DRIVE SCREW 10 GA X 1/2" LG
33	S4612-M1000-091	4	FLAT WASH. ZINC PLATED M10 I.D. 10.5 X O.D. 20 X 2 TH. (DIN 125 A)
34	S4612-M1200-0A1	24	FLAT WASHER M12 ZINC PLATED (DIN 125)
35	S4612-M1600-0BG	32	HARDENED GALV. M16 FLAT WASHER
36	S5211-10006-004	6	SNAP RING D1460-0450 DIA. 1.772"
37	S5212-10023-004	6	102mm NOM. DIA INTERNAL RETAINING RING
38	S5334-M0540-600	4	COTTER PIN STAINL 5MM X 40 MM 18-8
39	S6484-00007-000	6	SOCKET PLUG M10 X 1.0 TAPER THREAD
40	S6701-00013-000	6	O-RING 4.0 X 4.25 X 0.139"
41	S6711-00008-000	2	RADIAL SEAL(R.WIPER AU/STEEL)3.0X3.5X.312
42	SM120-025-101F01-0016	6	FUL. TH. HEX.B. 10.9 M12-1.75X25

4.9 TENSIONER PRE-ASSEMBLY (8032009-0330-4)

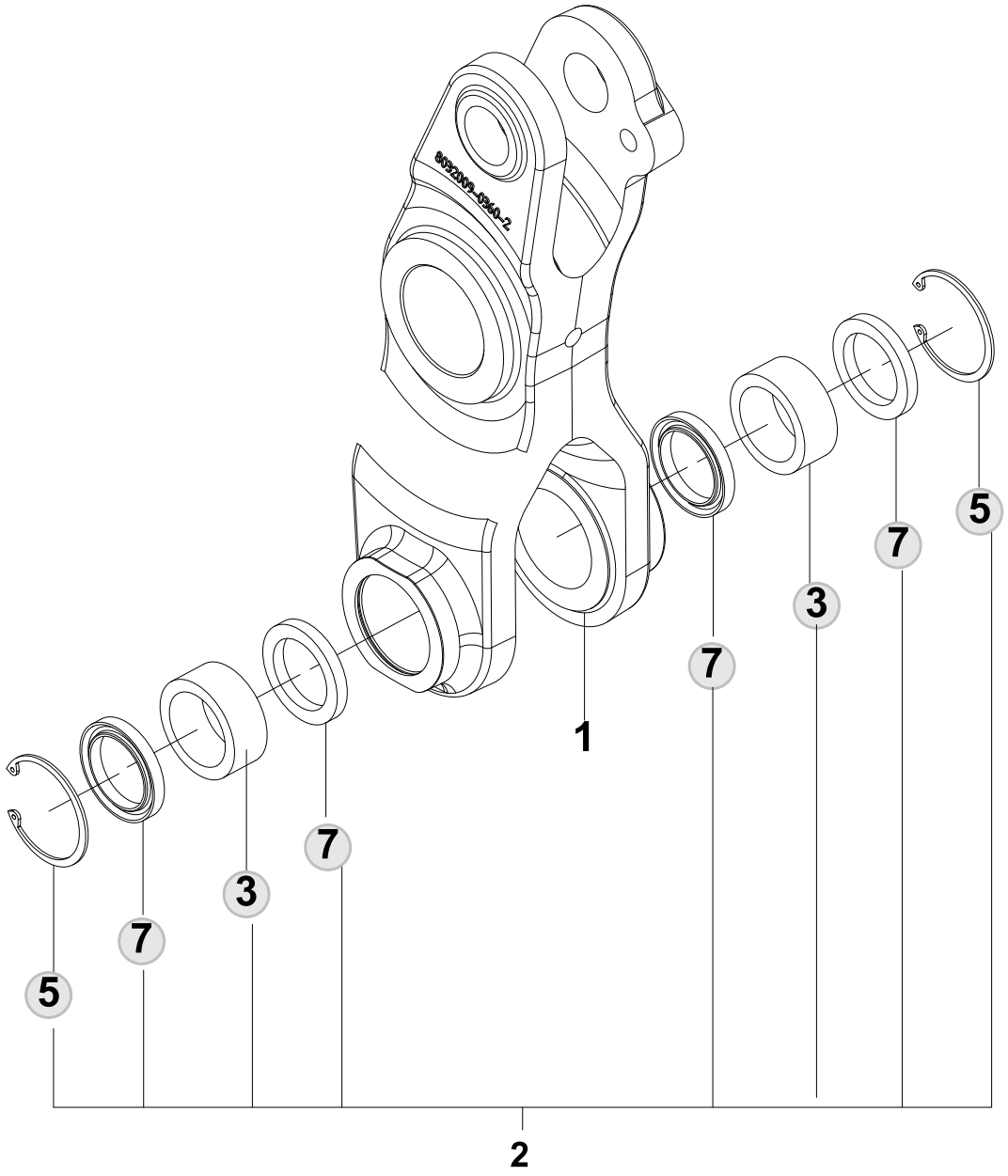

ITEM	PART #	QTY	DESCRIPTION
1	8032009-0150-2	1	TENSIONNER
2	KS-1140–1	1	SERVICE KIT

4.10 UNDERCARRIAGE PRE-ASSEMBLY (8032009-0320-4)

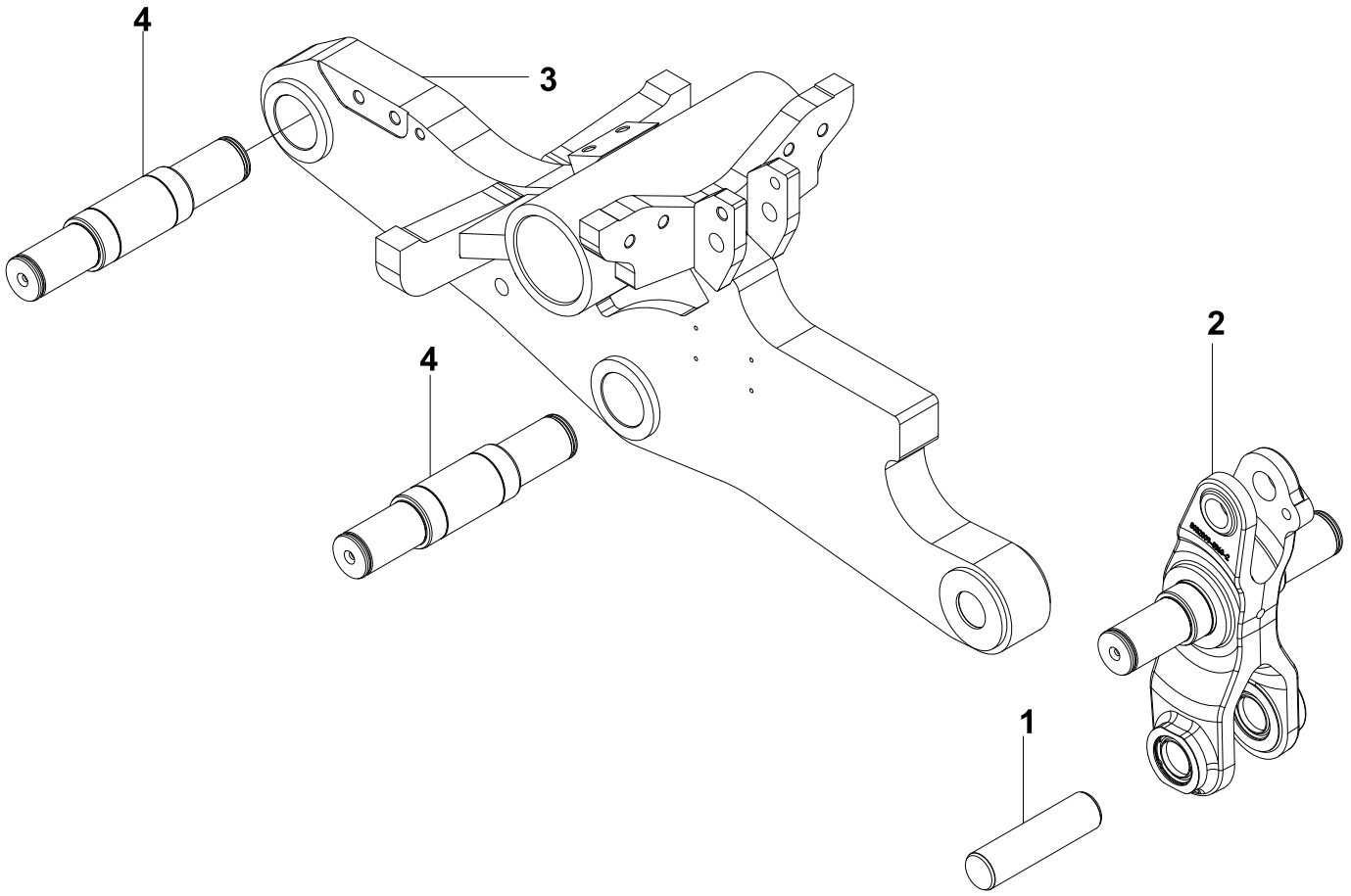

ITEM	PART #	QTY	DESCRIPTION
1	8182010-0010-1	1	TENSIONNER AXLE
2	8032009-0330-3	1	TENSIONER - PRE-ASSEMBLY
3	8032009-0350-3	1	UNDERCARRIAGE S-TECH 012P - PAINTED
4	8034013-0420-1	2	WHEEL AXLE

4.11 MIDROLLER WHEEL HUB ASSEMBLY (8034013-0360-1)

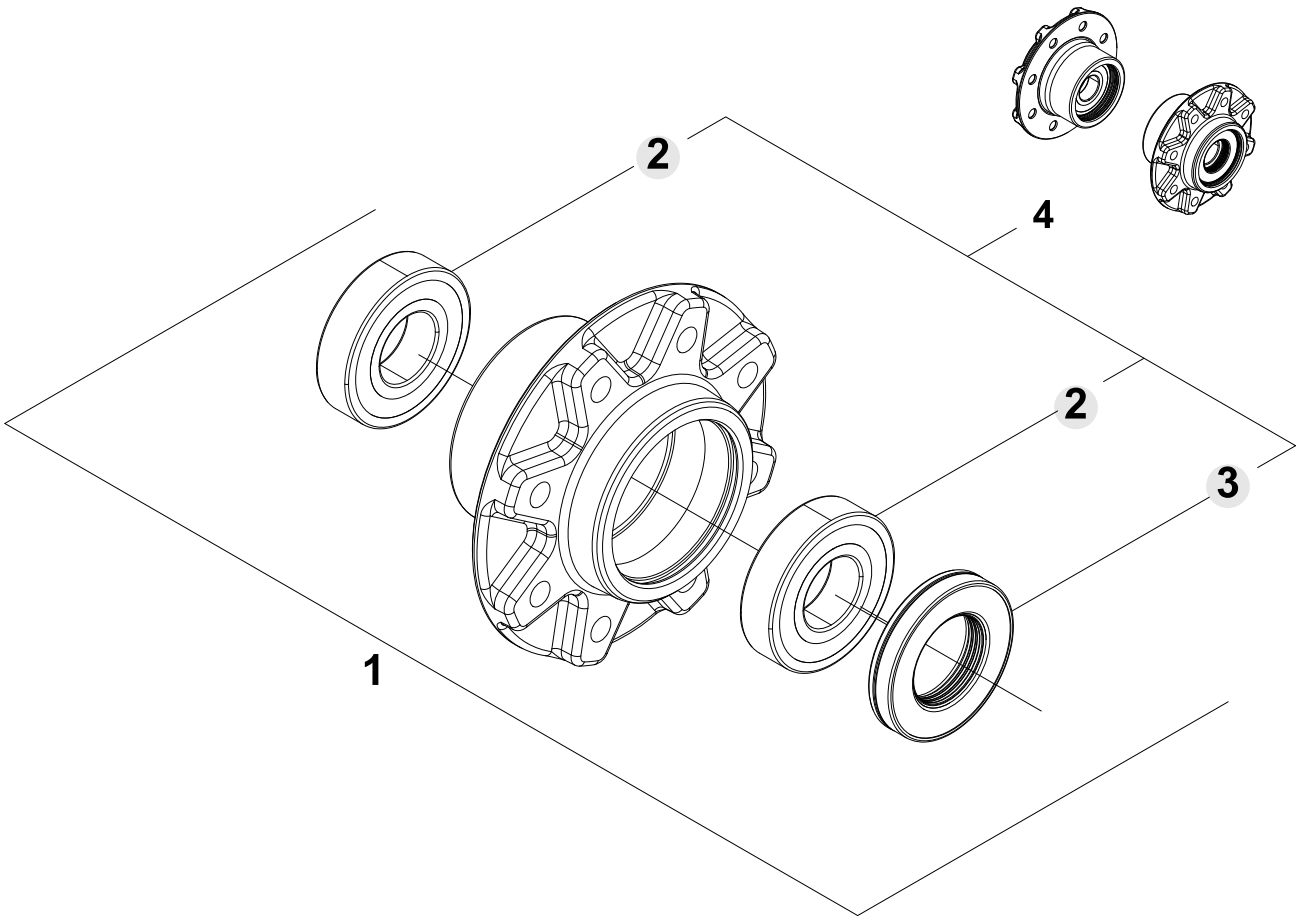

ITEM	PART #	QTY	DESCRIPTION
1	8034013-0360-1	1	WHEEL HUB ASSEMBLY
4	KS-1139-1	1	SERVICE KIT

4.12 IDLER WHEEL HUB ASSEMBLY (8034013-0410-1)

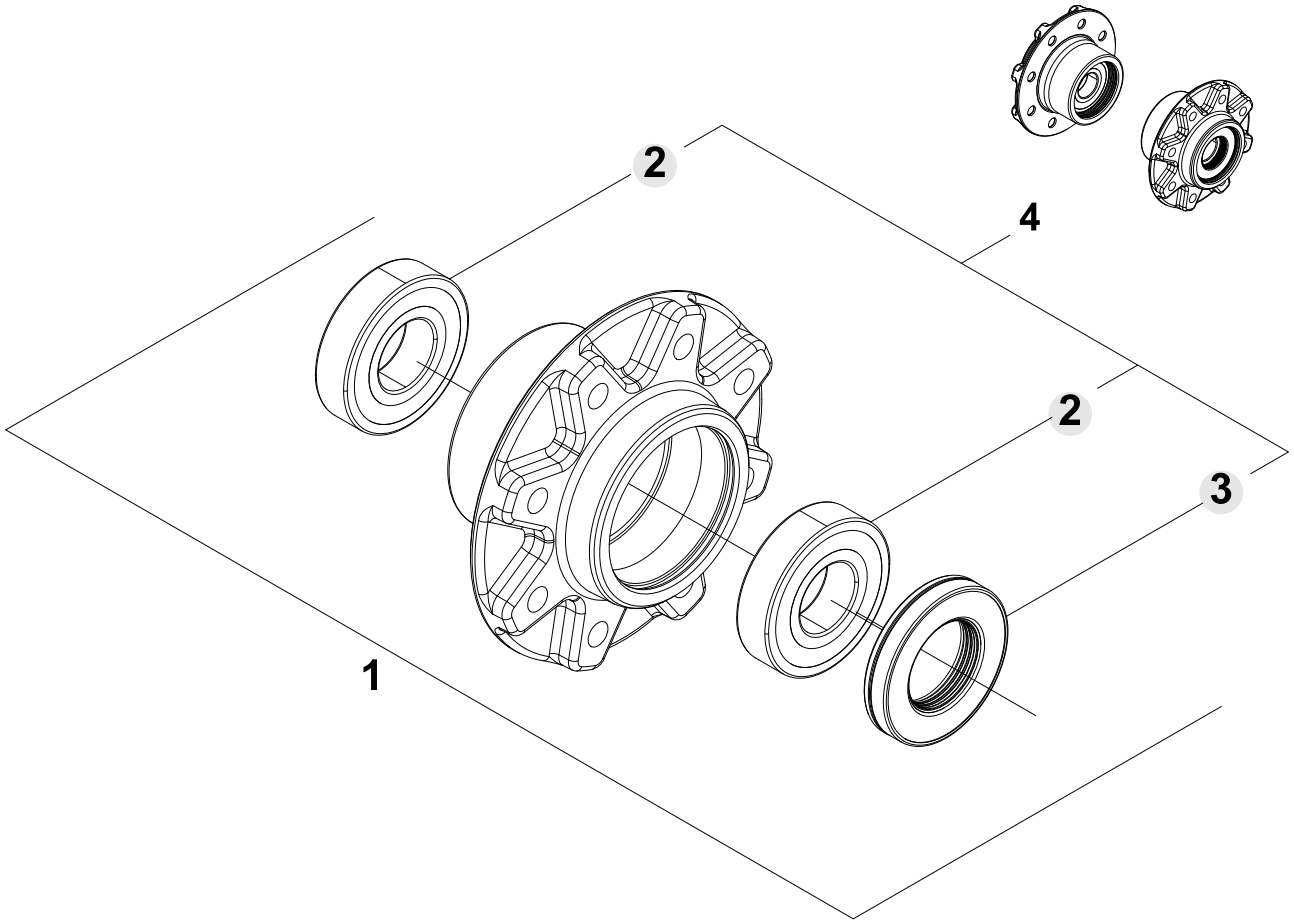

ITEM	PART #	QTY	DESCRIPTION
1	8034013-0410-1	1	WHEEL HUB ASSEMBLY
4	KS-1139-1	1	SERVICE KIT

4.13 TONE WHEEL HUB ASSEMBLY (8034013-0430–1)

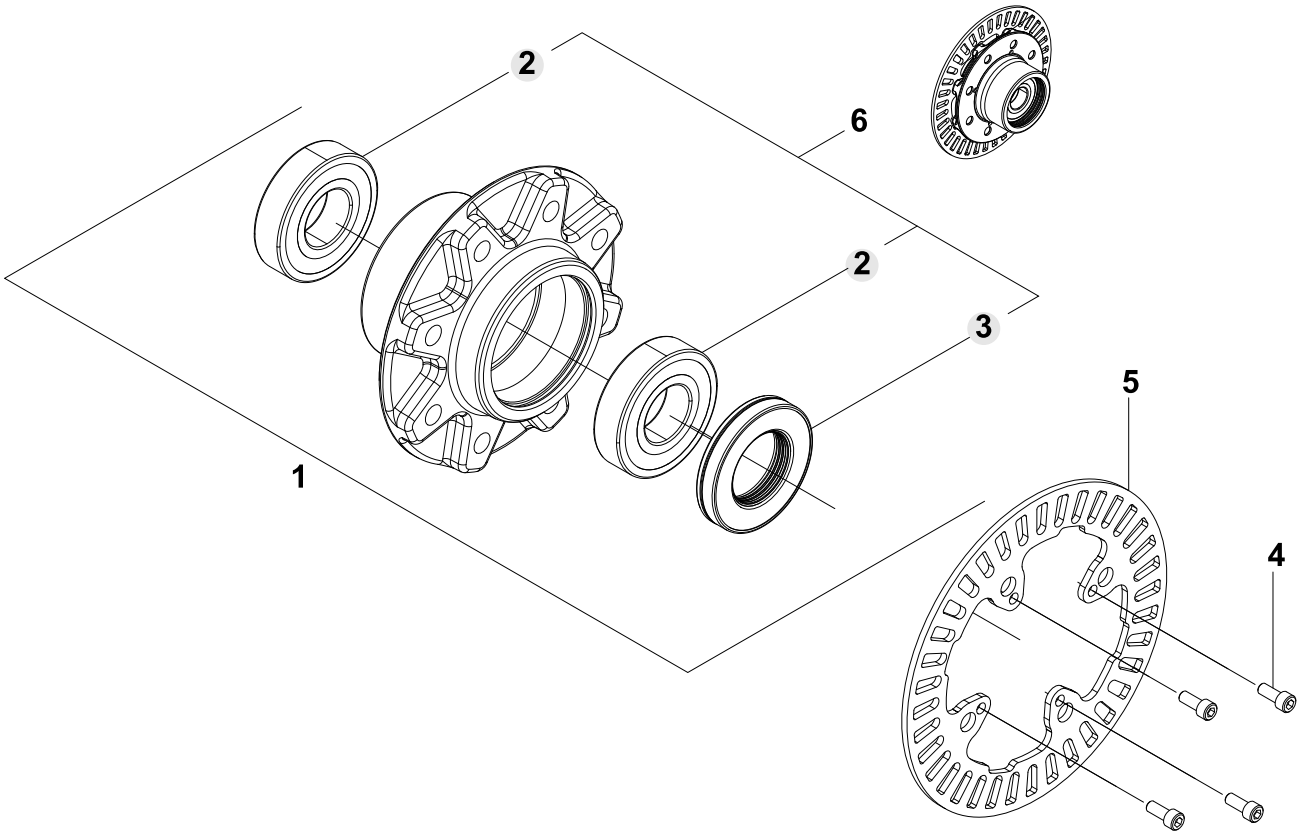

ITEM	PART #	QTY	DESCRIPTION
1	8034013-0410-1	1	WHEEL HUB ASSEMBLY
4	S3233-B1025-0B1	4	ZP. CYL.AL.S. CAP SCREW M10-1.25 X 25MM
5	8034013-0140-1	1	TONE WHEEL 28 TEETH
6	KS-1139-1	1	SERVICE KIT

4.14 UPPER SCRAPER ASSEMBLY (8032009–0590–1)

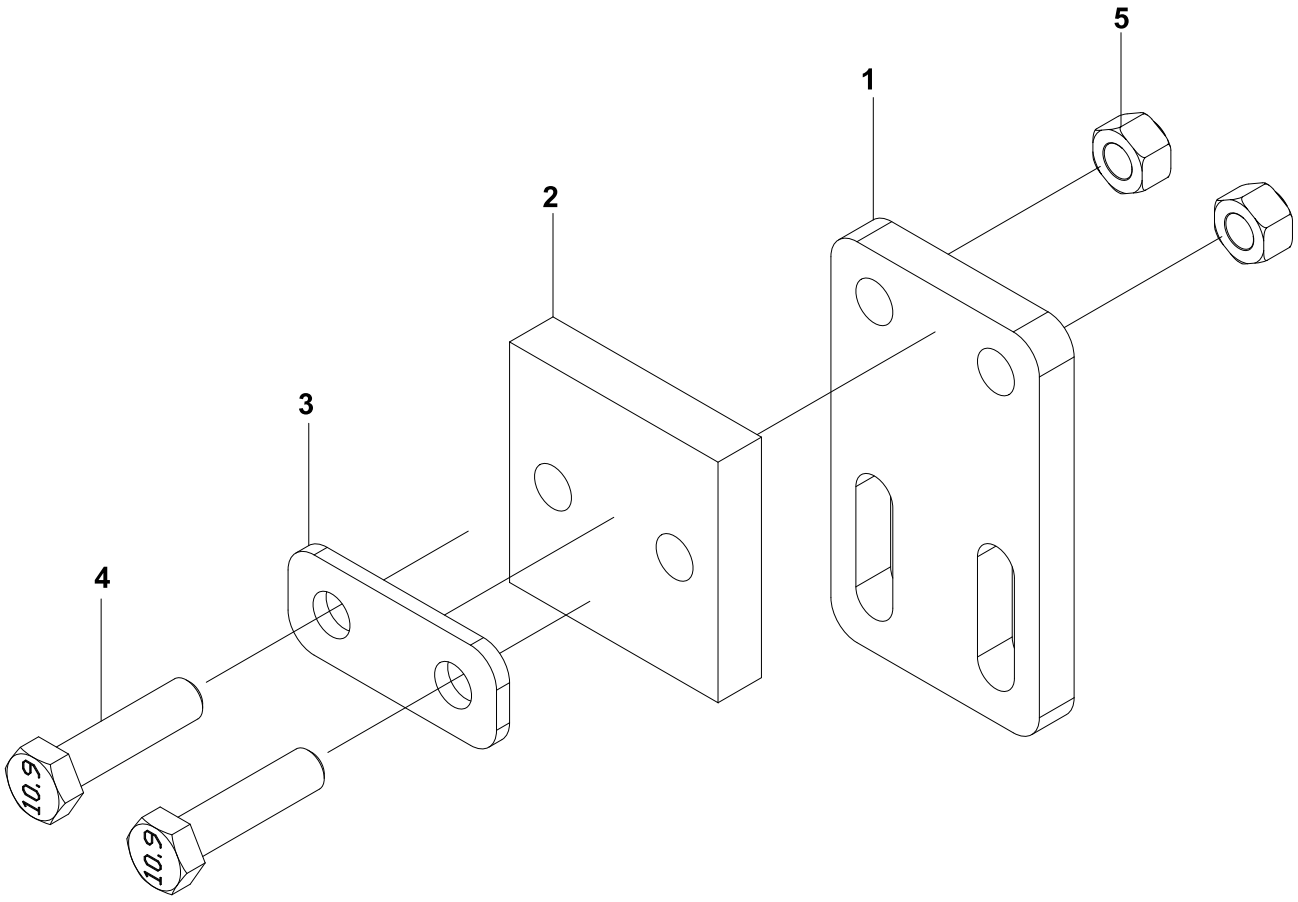

ITEM	PART #	QTY	DESCRIPTION
1	8032009-0560-1	1	SCRAPER PLATE
2	8032009-0570-1	1	SCRAPER
3	8032009-0580-1	1	WASHER PLATE
4	S1111-12050-0F1	2	HEX. B. GR10.9 ZP M12-1.75 X 50MM (DIN 931)
5	S4186-M120P-021	2	HEX. NYLON NUT CL8.8 ZINC PLATED M12-1.75 (DIN 985)

4.15 HYDRAULIC SYSTEM ASSEMBLY (8035008–0010–4)

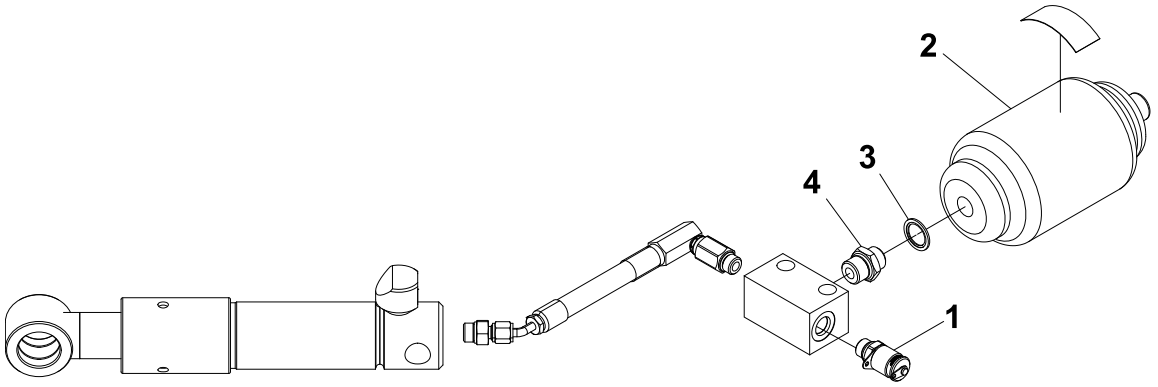

ITEM	PART #	QTY	DESCRIPTION
1	246-7033-0	1	TEST PORT COUPLING STAUFF M16 X 2 SMK20-9/16UNF-PE-C6F
2	H500R	1	ACCUMULATOR 250 BAR, 50 LT/MIN. THREAD M18-1.5
3	SEAL_9500-MM	1	BONDED SEAL DIA. 18 MM
4	UNION_5006L-12-08	1	STRAIGHT COUPLING SAE 8 - ORB M18-1.5

4.16 HYDRAULIC FILLING HOSE ASSEMBLY (SPT-0008–1)

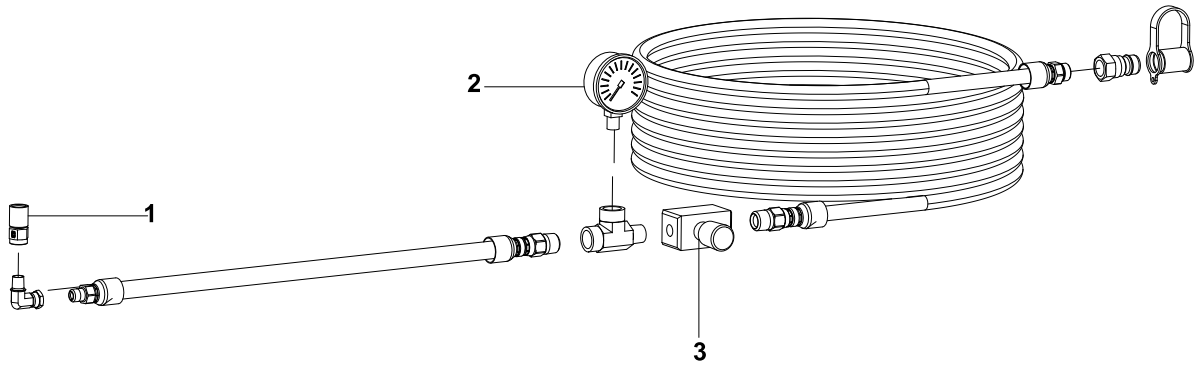

ITEM	PART #	QTY	DESCRIPTION
1	STAUFF SMD201/4NPTW3	1	TEST PORT COUPLINGS M16X2.0
2	SPG063-3000	1	PRESSURE GAUGE 0-3000 PSI, ¼ NPT
3	PARKER 012T-4-4	1	MALE RUN TEE NPTF 1/4 MRO

SECTION 5 PREPARATION

5.1 TOOLS LIST

The following tools are required to install the track system on a tractor:

- Metric tool box
- Impact wrench
- Fork lift and/or crane
- Torque wrench
- Pry bar
- External snap ring pliers

5.2 PREPARATION

- Make sure you have all the required parts and tools to do the job. The parts should be clean and free of corrosion.
- Familiarize yourself with components and their location.
- The system installation sequence is external/external or internal/internal, NOT left/left, right/right or alternate.

Figure 5.1 INSTALLATION SEQUENCE / JD 1770NT AND 1775NT

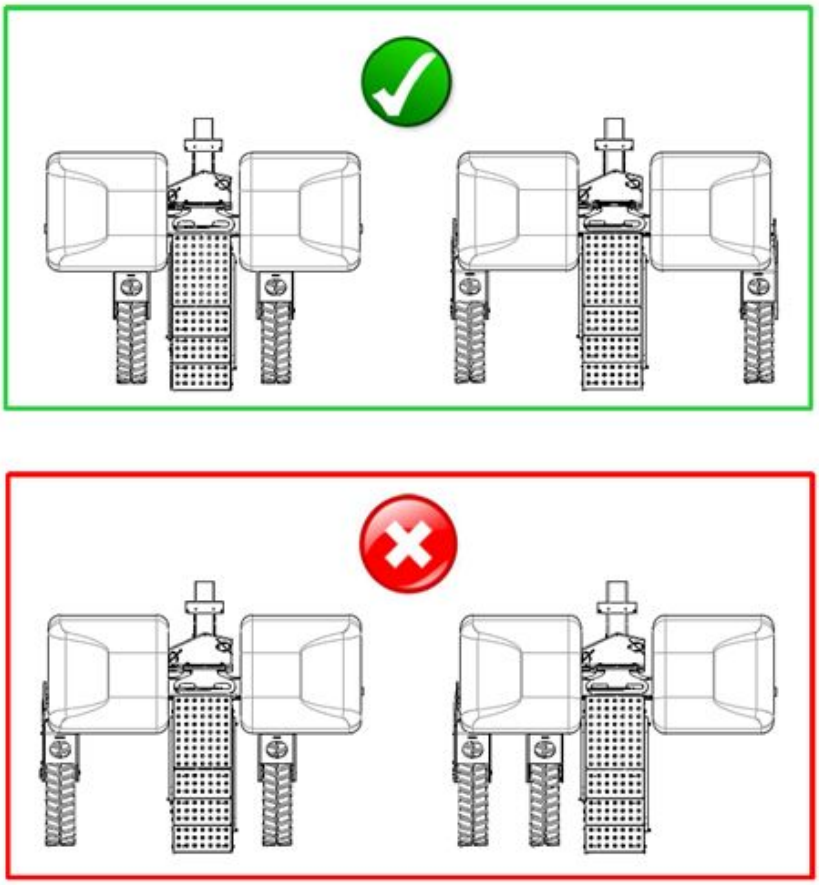

Page Intentionally Left Blank

SECTION 6 INSTALLATION OF THE TRACK SYSTEM

6.1 INSTALLATION OF THE TRACK SYSTEM – 12 / 16R30

6.1.1 REMOVAL OF OEM COMPONENTS / OUTER ARM – 12 / 16R30

⚠ CAUTION ⚠

WHEN THE PLANTER IS RAISED, MAKE SURE THAT IT IS PROPERLY SECURED / SUPPORTED TO PREVENT IT FROM ACCIDENTALLY FALLING DURING THE INSTALLATION OF THE TRACKS. IF NOT PROPERLY SECURED / SUPPORTED, SERIOUS PHYSICAL INJURIES COULD OCCUR.

NOTICE

ENSURE THAT THE PLANTER IS STABLE. SOUCY SUGGESTS LEAVING THE PLANTER HOOKED ON THE TRACTOR

1. Set the planter to transport mode.

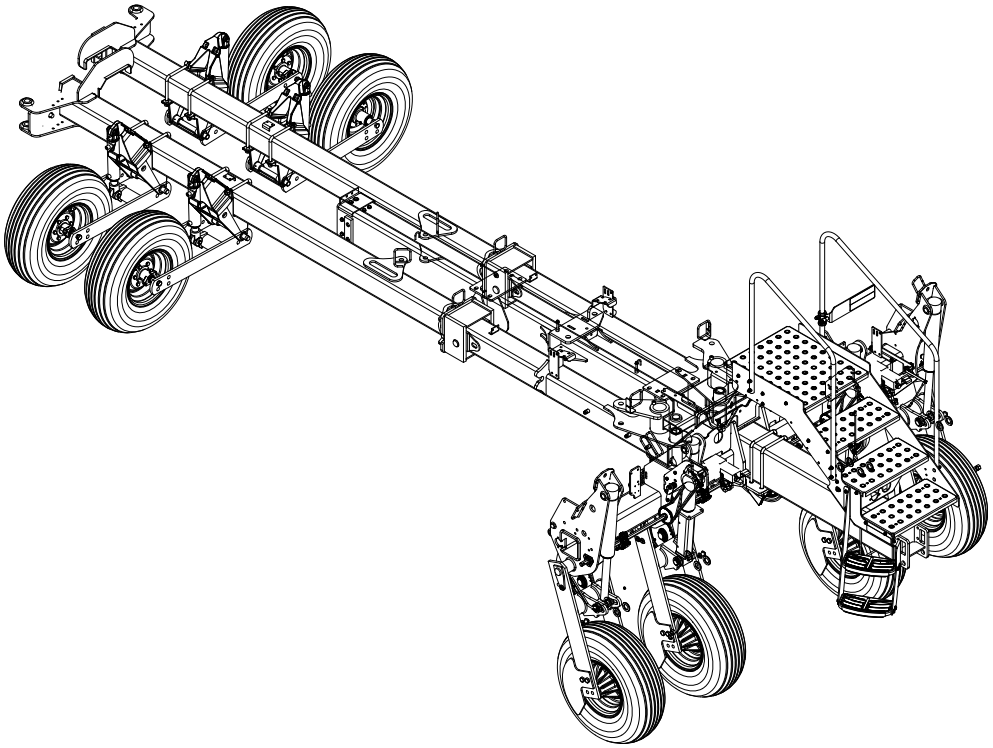

2. Install the service locks (A) according to the manufacturer’s technical instructions.

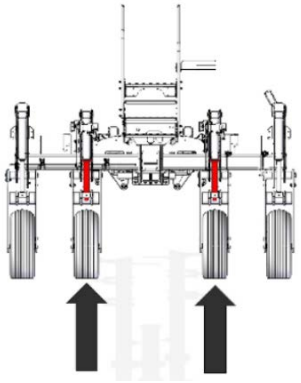

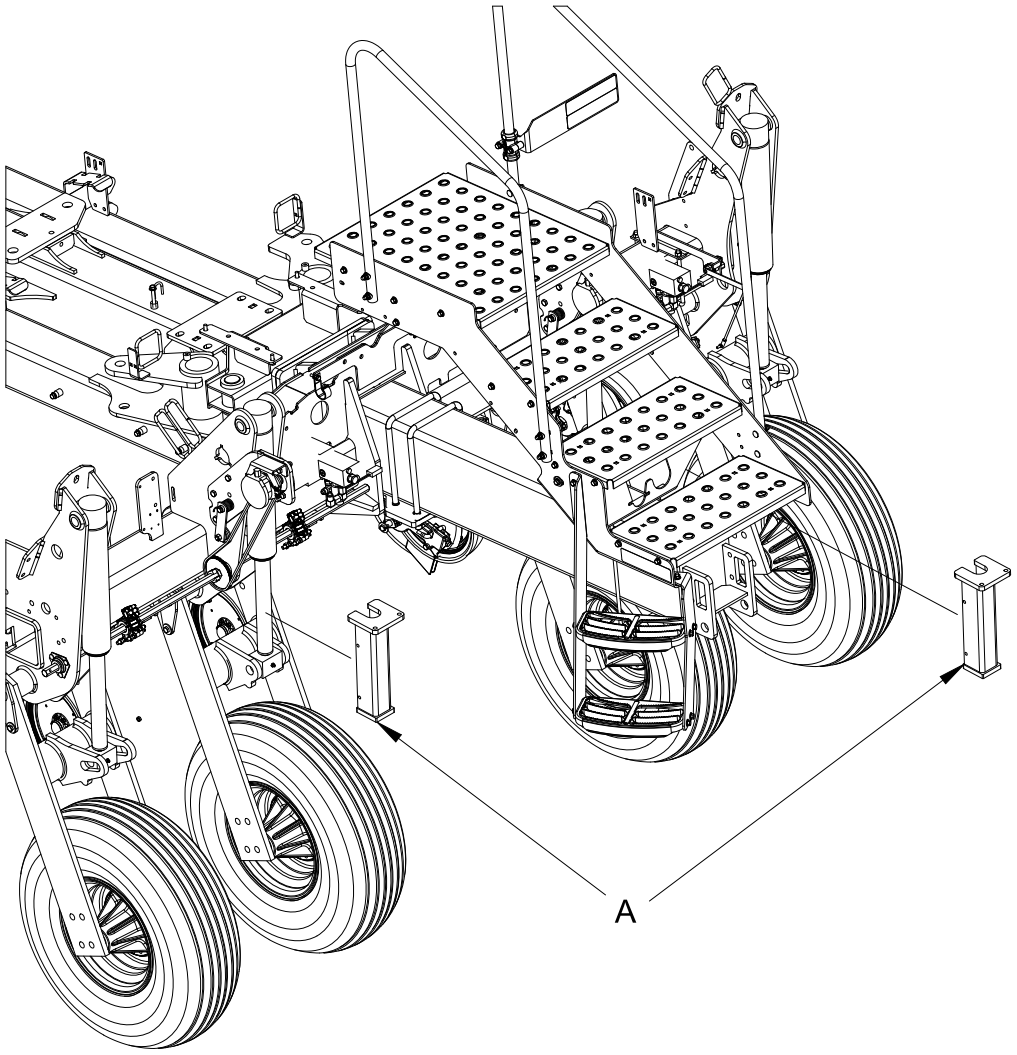

6.1.2 REMOVAL OF HEIGHT SENSOR – 12 / 16R30

1. Remove height sensor components (E) and hardware (F, G).
   Keep them for later installation.
2. Remove the rod-end (H) and nuts (J).
   Keep them for later installation.

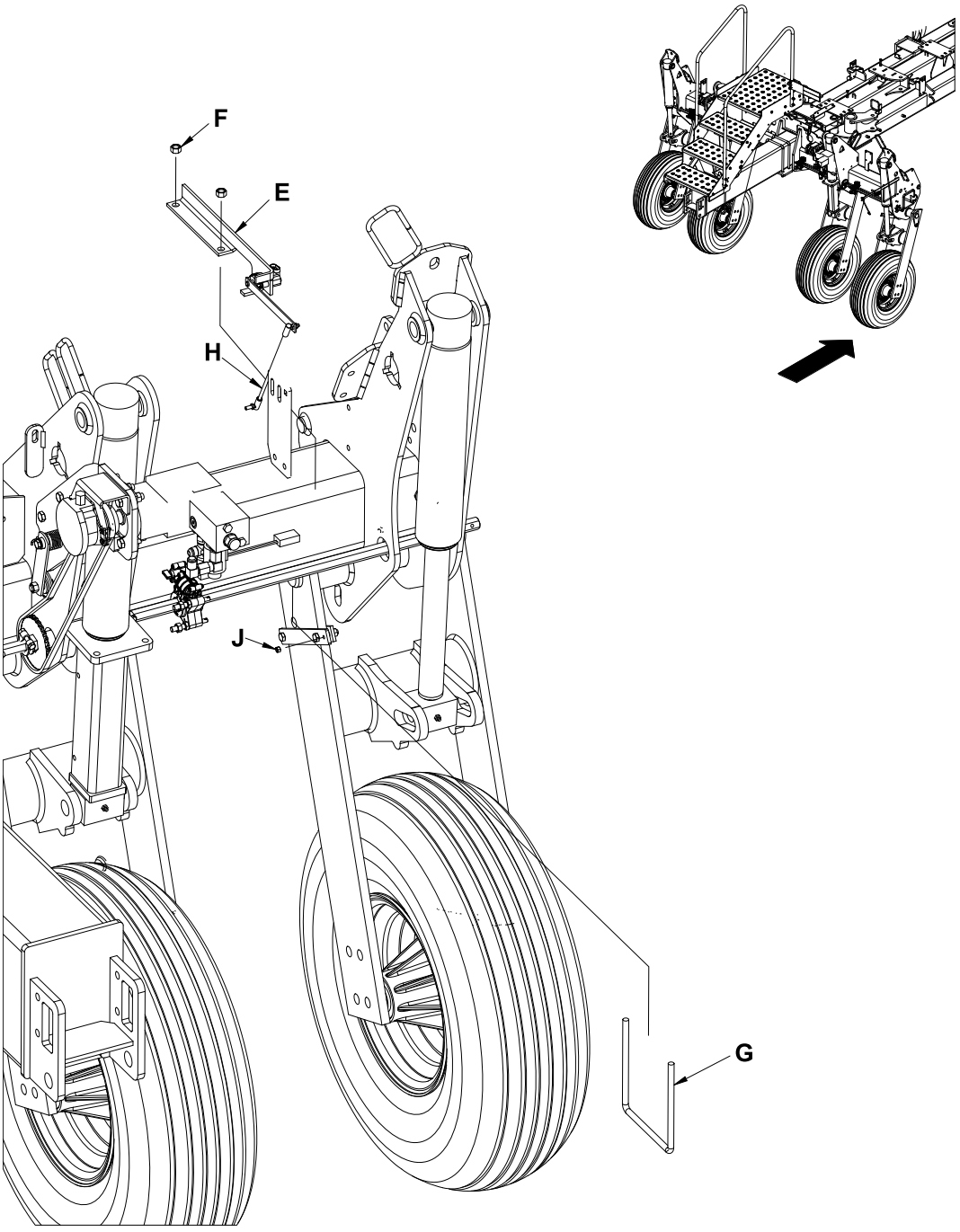

6.1.3 DISCONNECTION OF MOTION SENSOR – 12 / 16R30

1. Disconnect the motion sensor harness.

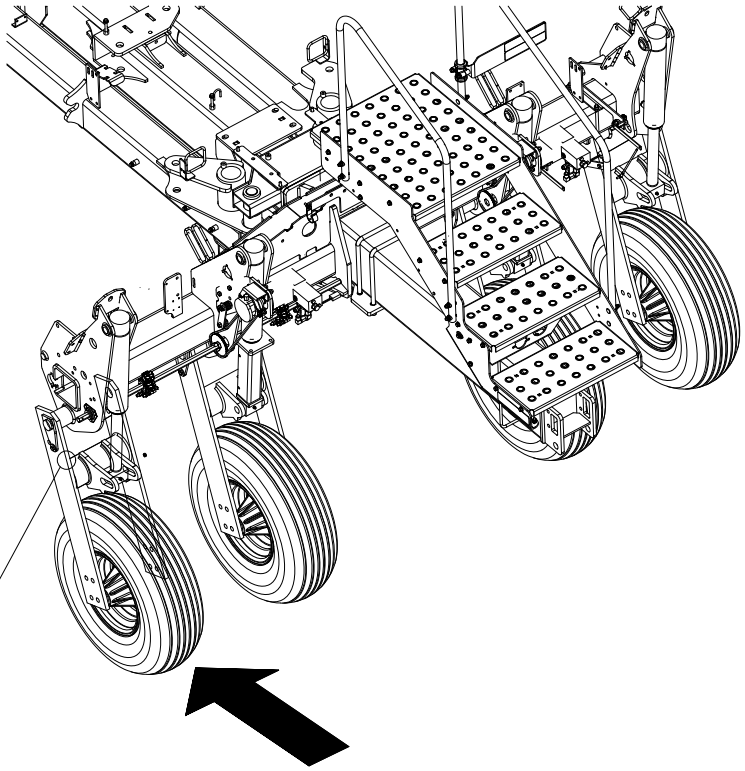



6.1.4 REMOVAL OF LIFT ARM 12 / 16R30

1. Remove the lift arm (M) and hardware (K, L).
   Keep them for later installation.

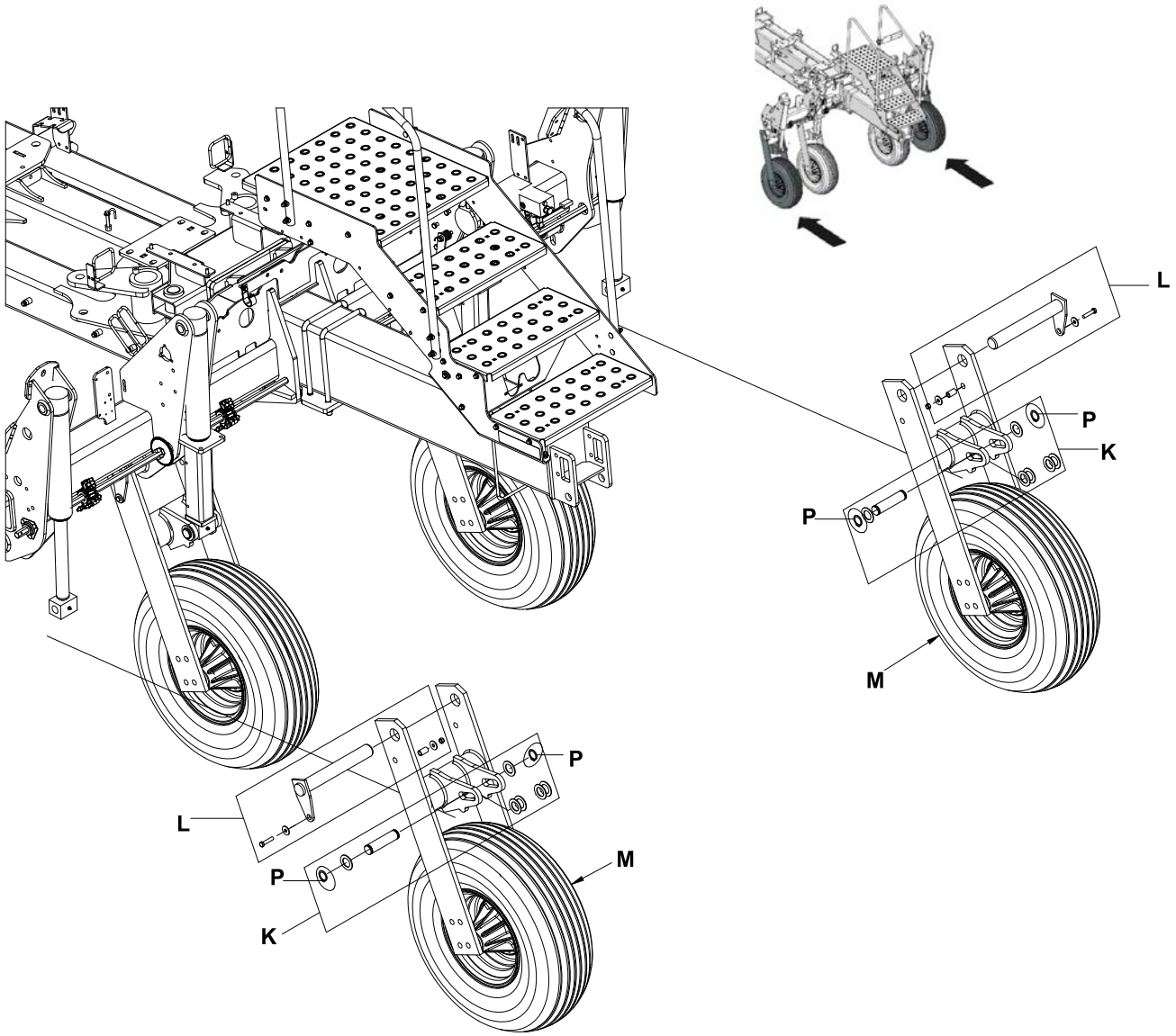

6.1.5 HEIGHT ADJUSTMENT OF CENTRE FRAME – 12 / 16R30

NOTICE

- REFER TO THE MANUFACTURER'S MANUAL FOR HEIGHT ADJUSTMENT PROCEDURE OF 12 / 16R30 WING FRAME.

1. Perform all frame height adjustments with the machine on flat ground.
2. For centre frame height 20 " (514 mm) to 22 " (564 mm), rotate height adjustment blocks (1) by 180 degrees.
3. Repeat the adjustment on each side and each lift arm.
4. Apply Loctite 271 or equivalent then torque bolts (3).

Figure 6.1 NORMAL FIELD POSITION – FRAME HEIGHT 20"

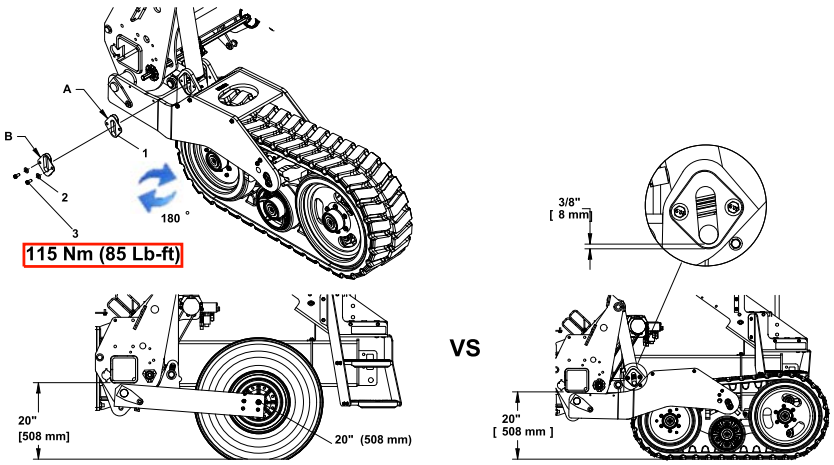

Figure 6.2 RAISED FRAME POSITION – FRAME HEIGHT 22 "

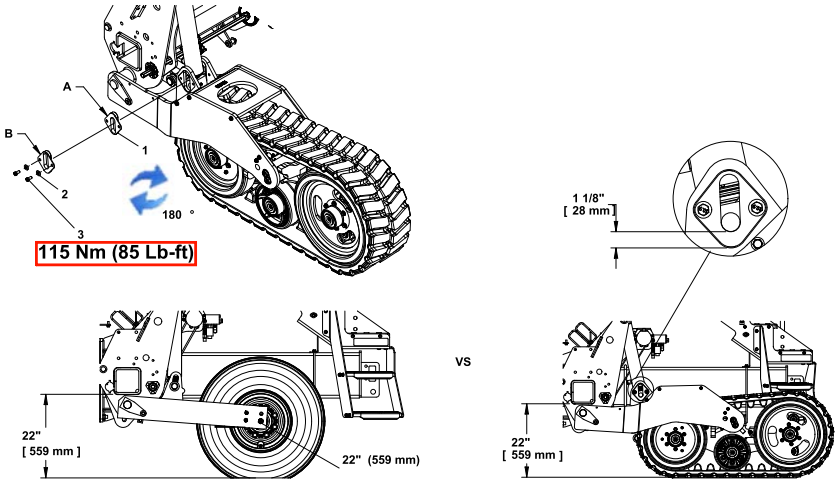

ITEM	PART#	QTY		ITEM	PART#	QTY
1	8031030-0090-1	8		3	S1111-12025-0F7	16
2	S4521-M1200-002	16				

6.1.6 GROUND DRIVE OPTION



NOTICE

FOR PLANTERS EQUIPPED WITH A FACTORY-INSTALLED GROUND-DRIVE SYSTEM (SEEDS OR FERTILIZER), REFER TO THE GROUND-DRIVE INSTALLATION GUIDE BEFORE PROCEEDING TO TRACK INSTALLATION.





6.1.7 INSTALLATION OF OUTER LIFT ARM – 12 / 16R30

1. Installs the lift arm (1, 2) and hardware (L, K).
2. Apply Loctite 271 or equivalent then torque bolts [L].

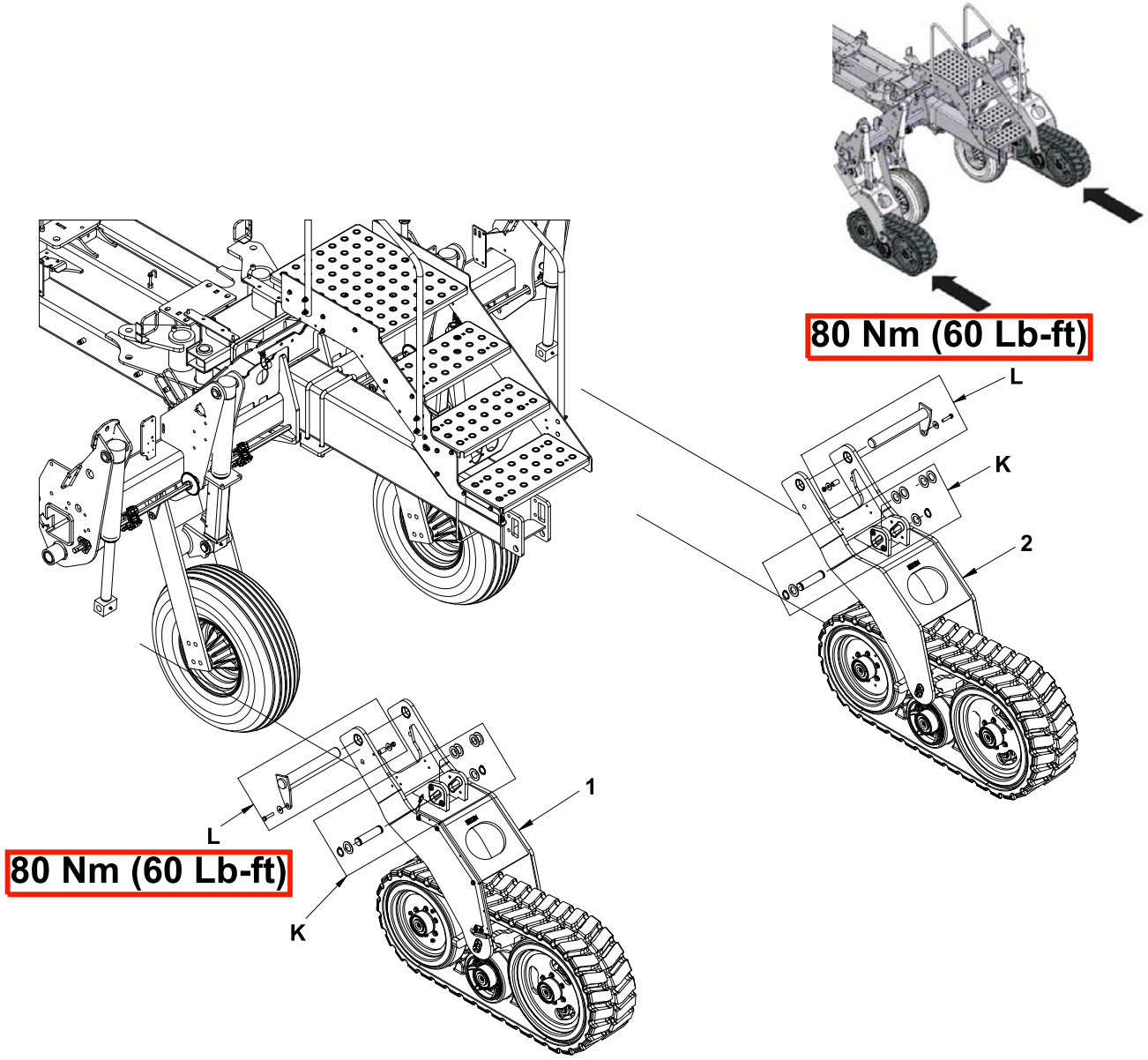

ITEM	PART#	QTY		ITEM	PART#	QTY
1	8032010-0020-4	1		2	8032010-0010-4	1

6.1.8 CONNECTION OF THE MOTION SENSOR – 12 / 16R30

1. Reconnect the motion sensor harness.
2. Secure the motion sensor harness in the holes (A).

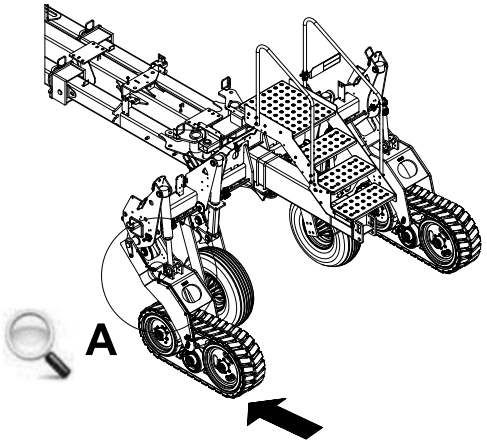

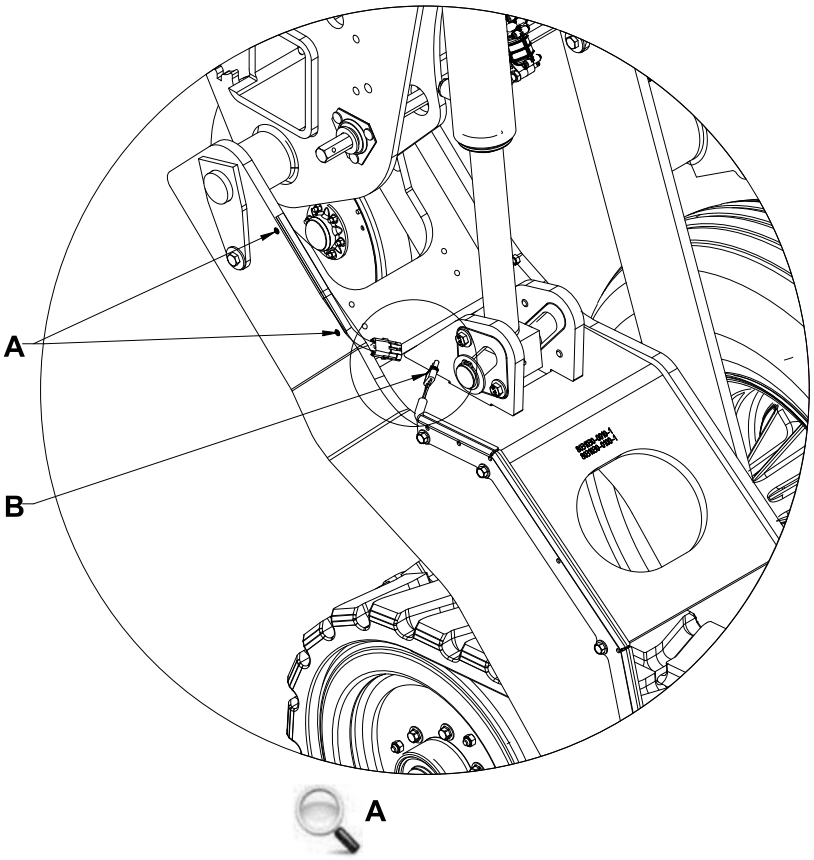

ITEM	DESCRIPTION
A	MOUNTING HOLES
B	MOTION SENSOR CONNECTOR

6.1.9 REMOVAL OF OEM COMPONENTS FROM CENTRE LIFT ARM – 12 / 16R30

⚠ CAUTION ⚠

WHEN THE PLANTER IS RAISED, MAKE SURE THAT IT IS PROPERLY SECURED / SUPPORTED TO PREVENT IT FROM ACCIDENTALLY FALLING DURING THE INSTALLATION OF THE TRACKS. IF NOT PROPERLY SECURED / SUPPORTED, SERIOUS PHYSICAL INJURIES COULD OCCUR.

NOTICE

ENSURE THAT THE PLANTER IS STABLE. SOUCY SUGGESTS LEAVING THE PLANTER HOOKED ON THE TRACTOR

1. Install the service locks (A) according to planter operator manual.

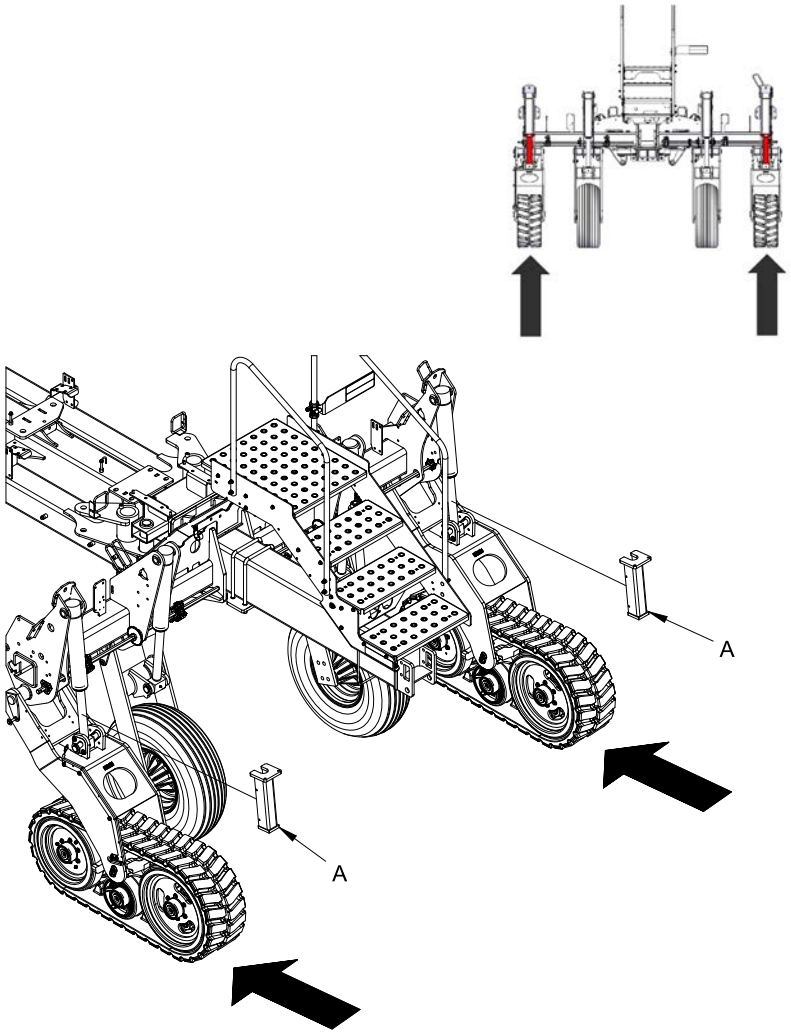

2. Remove the lift arm (M) and hardware (K) and the lift arm pin (L).
   Keep them for later installation.

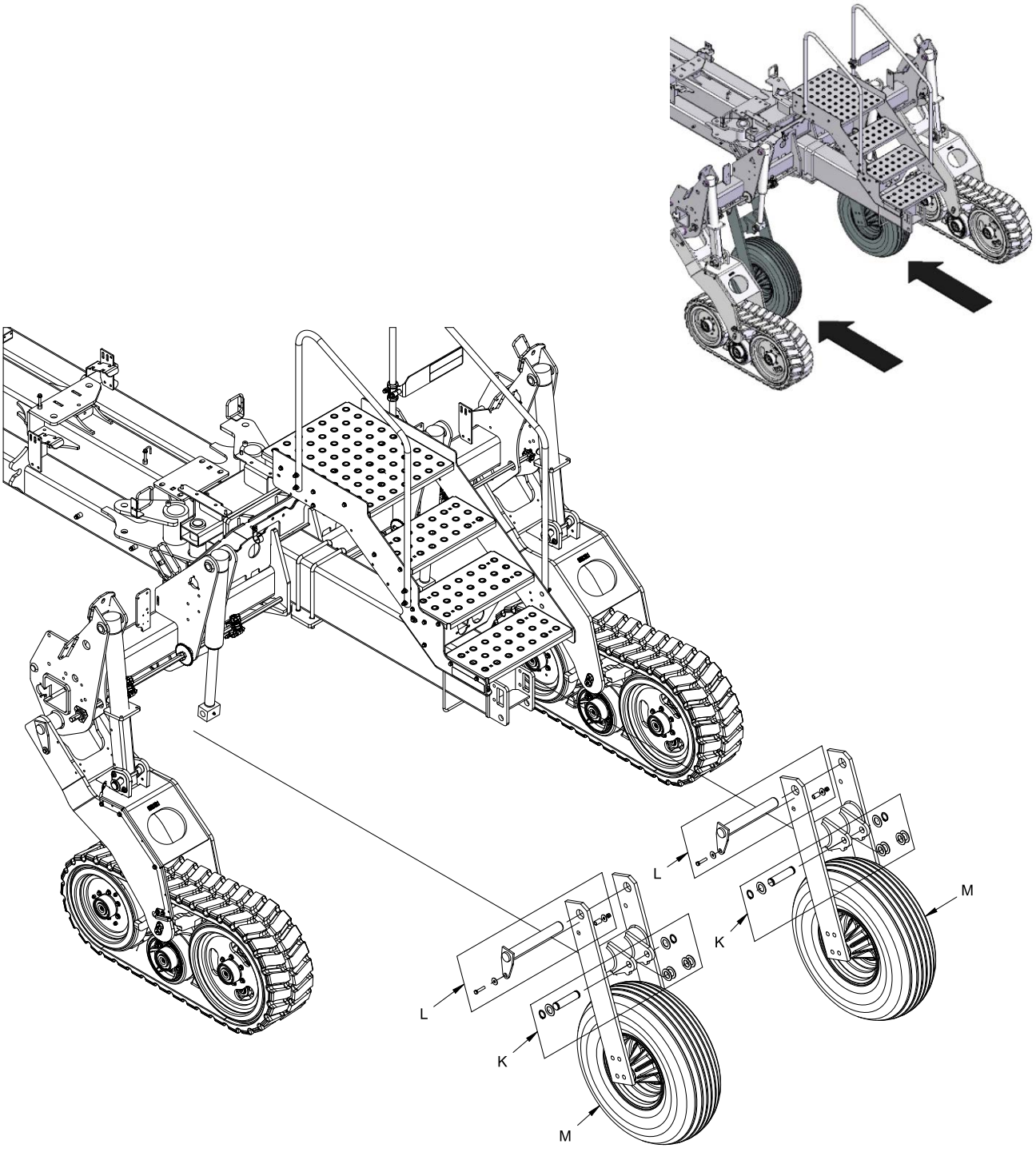

6.1.10 INSTALLATION OF HEIGHT SENSOR – 12 / 16R30

1. Install height sensor components (E) and hardware (F, G). (See Detail B).
2. Torque nuts [F].

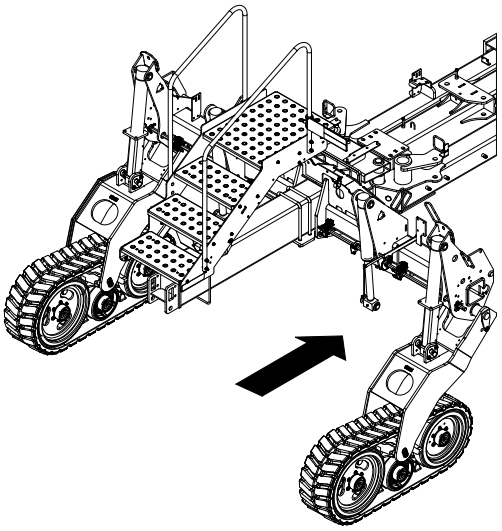

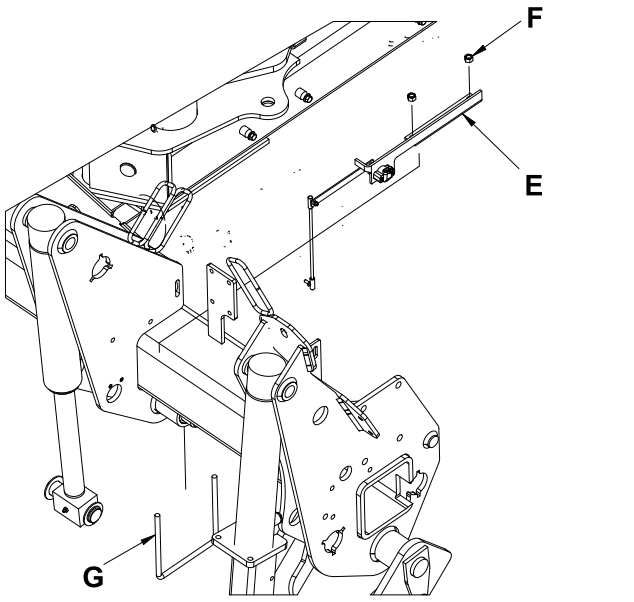

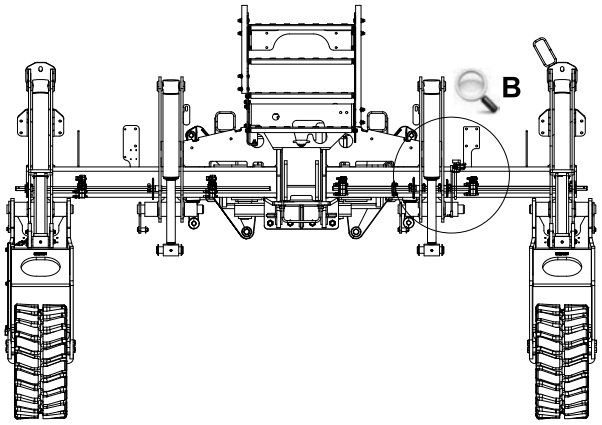

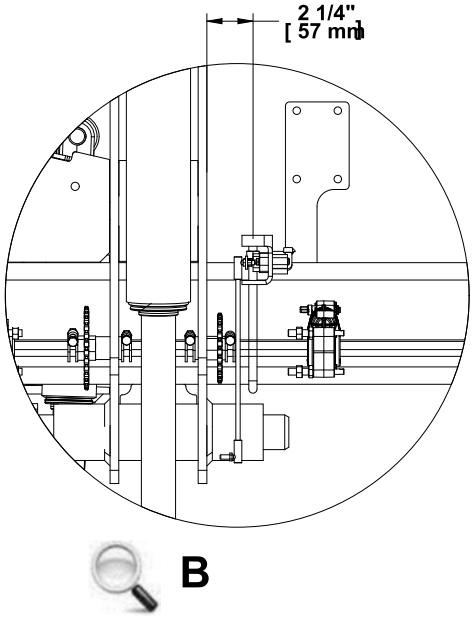

6.1.11 RELOCATION OF VARIABLE RATE DRIVE MOTOR – 12 / 16R30

1. Replace the OEM hydraulic pump plate (N) with Soucy plate (1).
2. Reinstall the chain tensioner (O) and the chain (S) with hardware (R), according to planter instruction manual.
3. Apply Loctite 271 or equivalent then torque bolts [P, R].
4. Repeat previous steps for both motors.

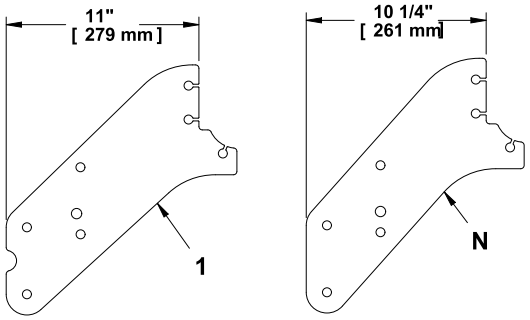

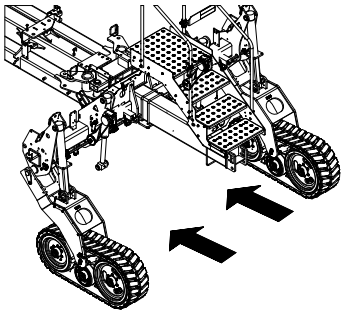

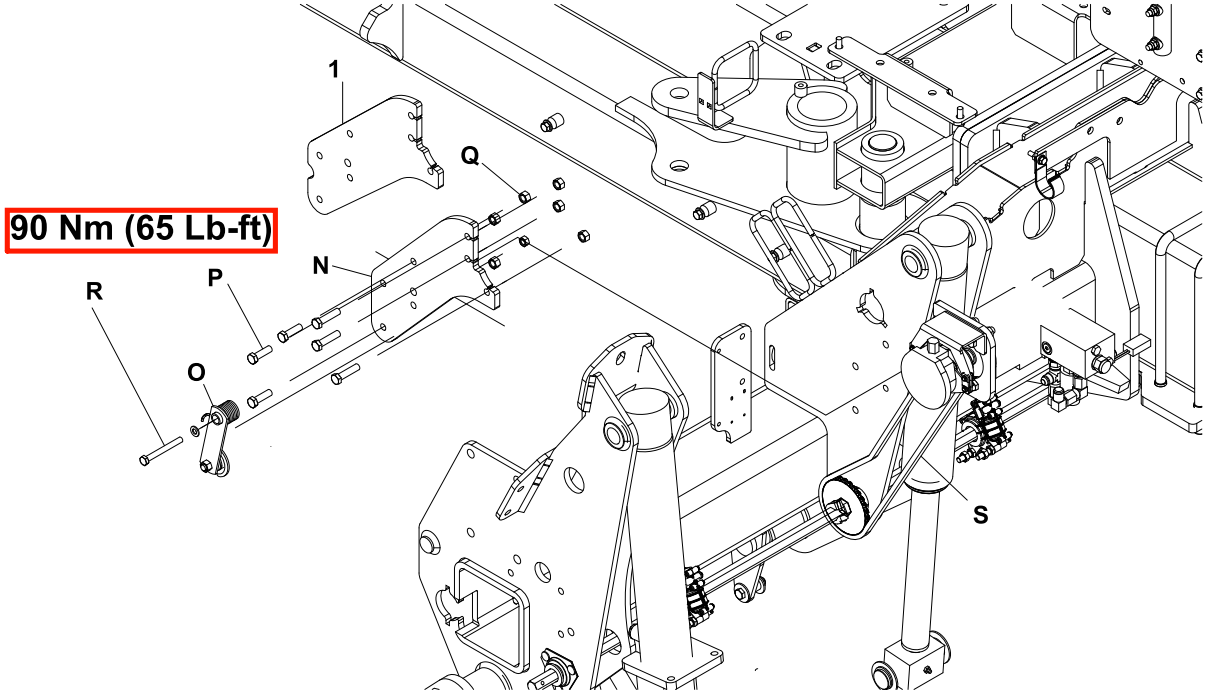

ITEM	PART#	QTY		ITEM	PART#	QTY
1	8031030-0270-1	2				

6.1.12 INSTALLATION OF THE CENTRE LIFT ARM – 12 / 16R30

⚠ CAUTION ⚠

IF PLANTER IS EQUIPED WITH A SEED GROUND DRIVE SYSTEM, UPPER HYDRAULIC FITTING MUST BE REPLACED ON THE TWO (2) INNER CYLINDERS. OTHERWISE ORIGINAL FITTINGS WILL INTERFERE WITH THE SEED DRIVE HEX SHAFT (B). REPLACEMENT FITTINGS ARE SUPPLIED WITH THE 12 / 16R30 GROUND DRIVE MODULE (8031030-5360-1). THIS CHANGE MUST BE PROPERLY DONE, OTHERWISE SERIOUS PHYSICAL INJURIES COULD OCCUR.

1. Install the lift arm (1) and hardware (L, K).
2. Apply Loctite 271 or equivalent, then torque bolts [L].

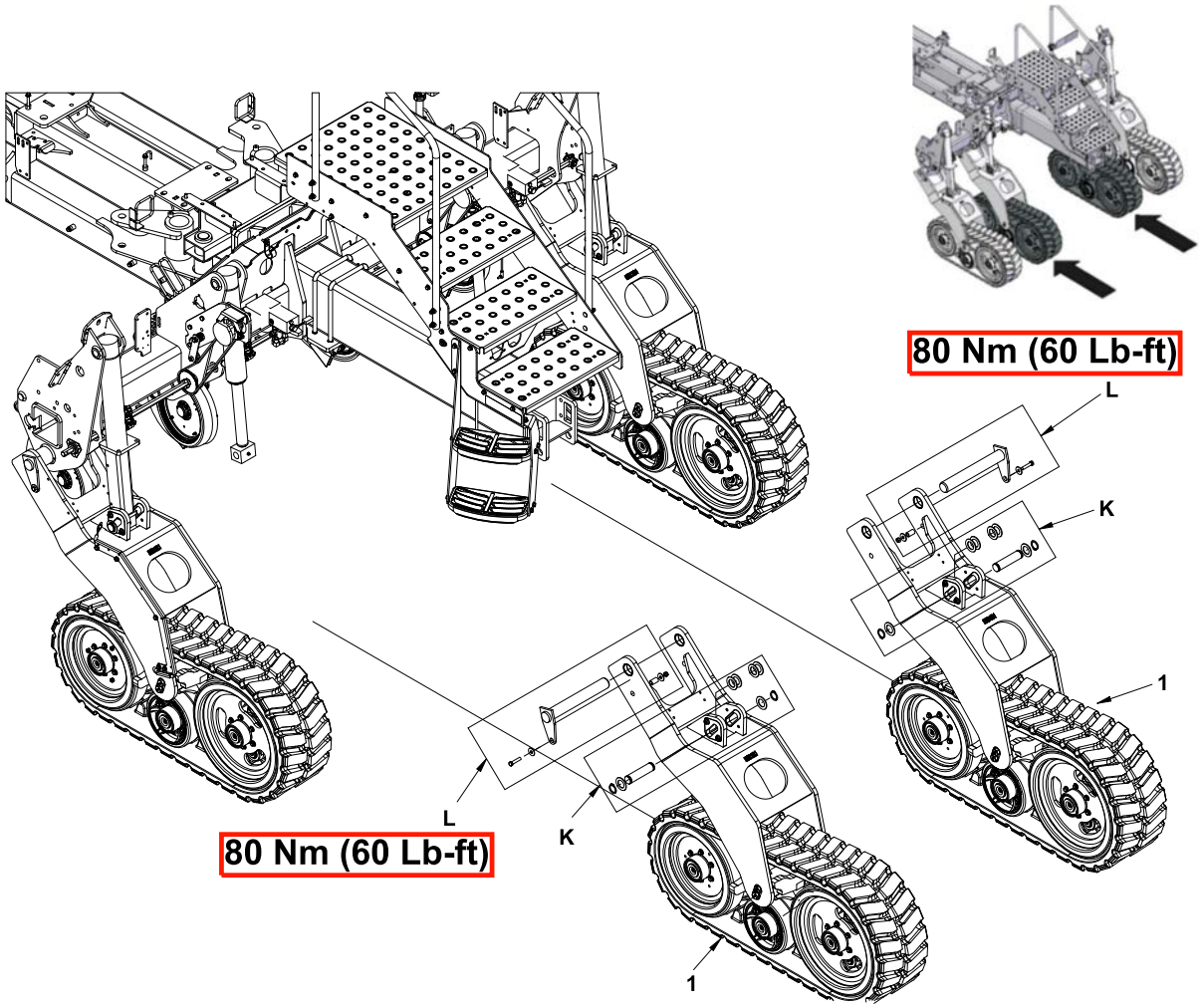

ITEM	PART#	QTY		ITEM	PART#	QTY
1	8032010-0010-4	2				

6.1.13 ADJUSTMENT OF THE ROD END – 12 / 16R30

1. Install and adjust the height sensor plate (1) with bolts (2).
2. Torque bolts [2].

NOTICE

AFTER INSTALLATION, CALIBRATE THE HEIGHT SENSOR ACCORDING TO THE MANUFACTURER'S OPERATOR MANUAL (***"CALIBRATE COMMON START AND STOP HEIGHT" OR " CALIBRATE SEPARATE START AND STOP" HEIGHT***) PROCEDURE.

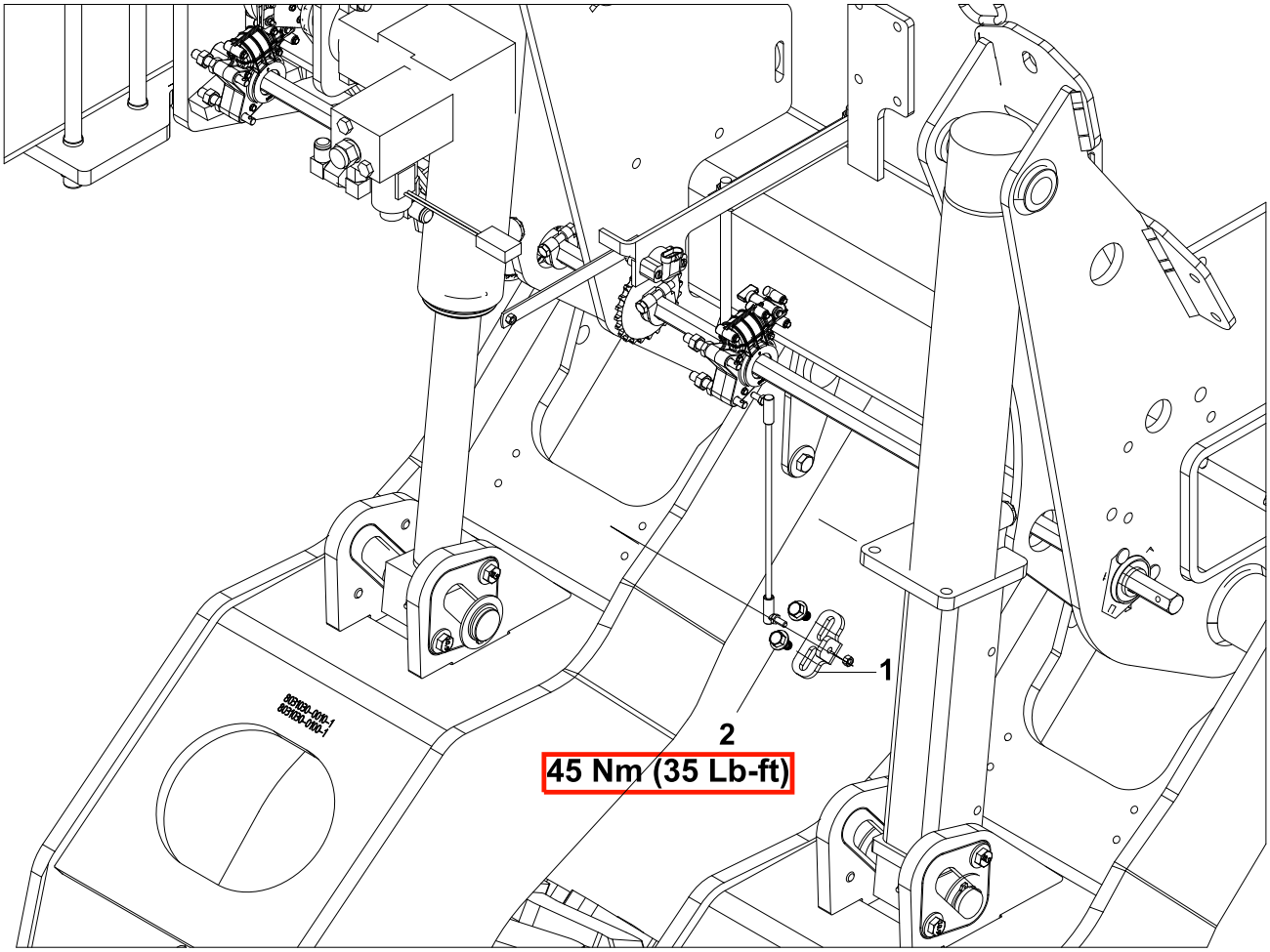

ITEM	PART#	QTY		ITEM	PART#	QTY
1	8031030-0280-1	2		2	S1114-10020-1D7	2

6.1.14 REMOVAL OF SERVICE LOCK – 12 / 16R30

1. Remove service locks (A) before use.

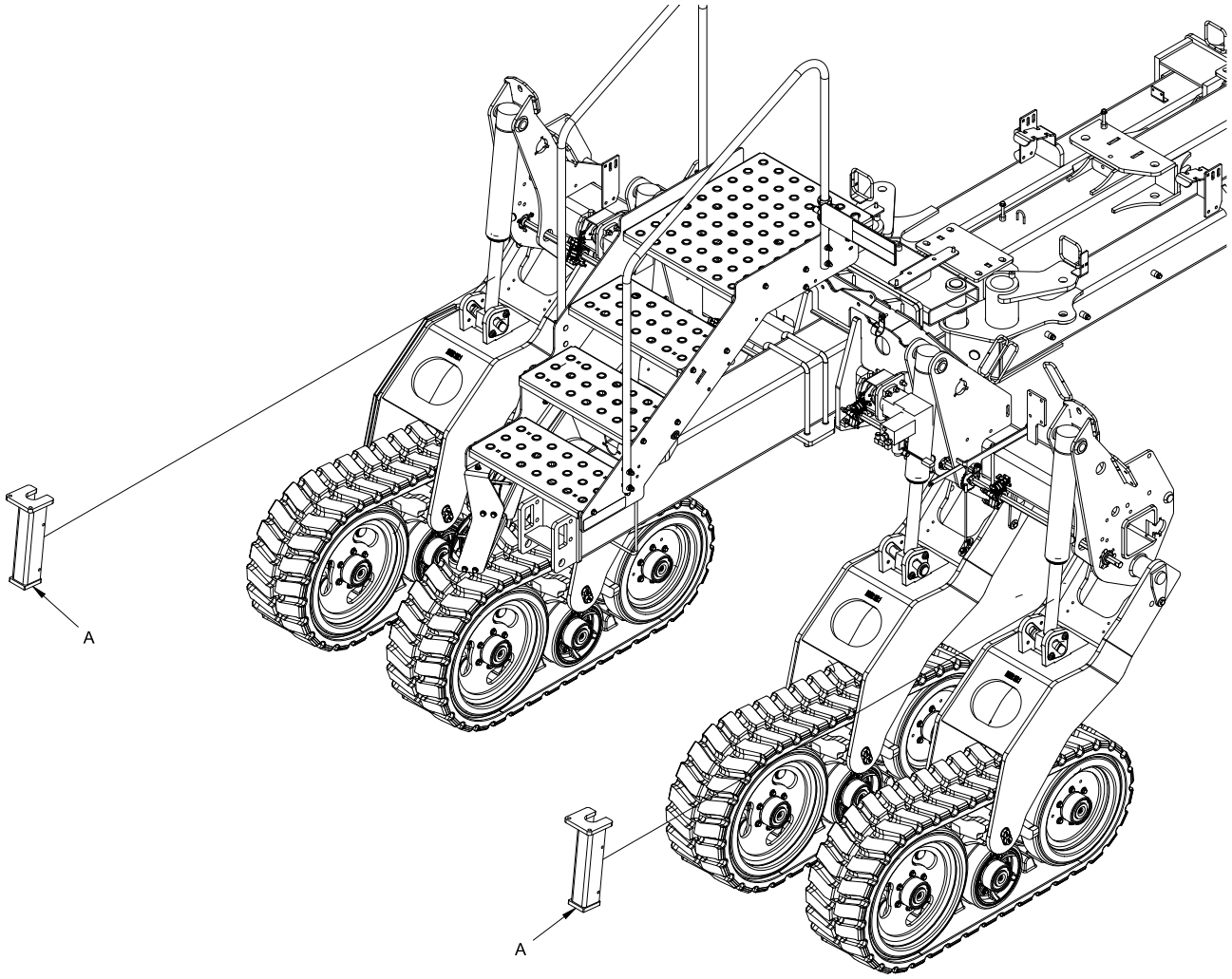

6.2 INSTALLATION OF THE TRACK SYSTEM – 24R30

6.2.1 HEIGHT ADJUSTMENT OF CENTRE FRAME– 24R30

NOTICE

- REFER TO THE MANUFACTURER'S MANUAL FOR HEIGHT ADJUSTMENT PROCEDURE OF 24R30 WING FRAME.

1. Adjust the height of the entire frame with the machine on flat level.
2. Transfer the height adjustment block (1, 2) to the opposite side in order to change the height of the centre frame.
3. Repeat adjustments for each side and each lift arm.
4. Apply Loctite 271 or equivalent then torque bolts (3).

Figure 6.3 NORMAL POSITION FOR FIELDS (FRAME HEIGHT 21")

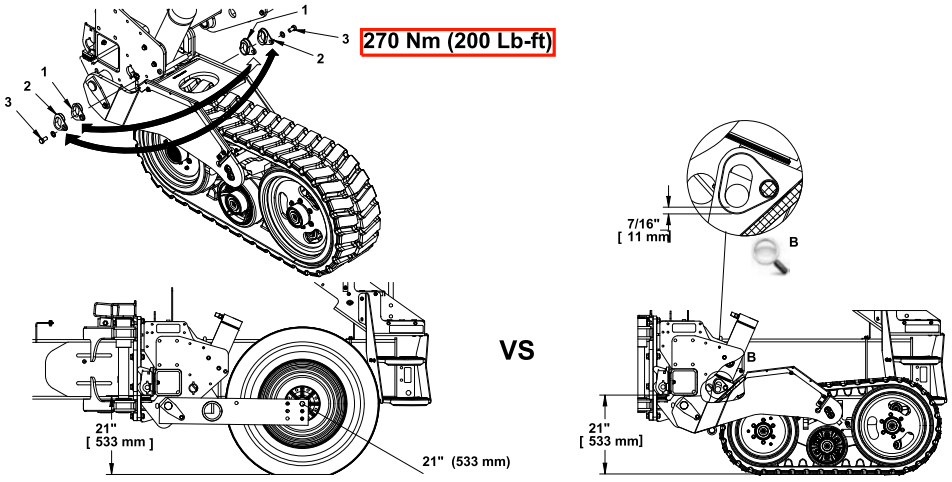

Figure 6.4 RAISED FRAME POSITION (FRAME HEIGHT 23 ")

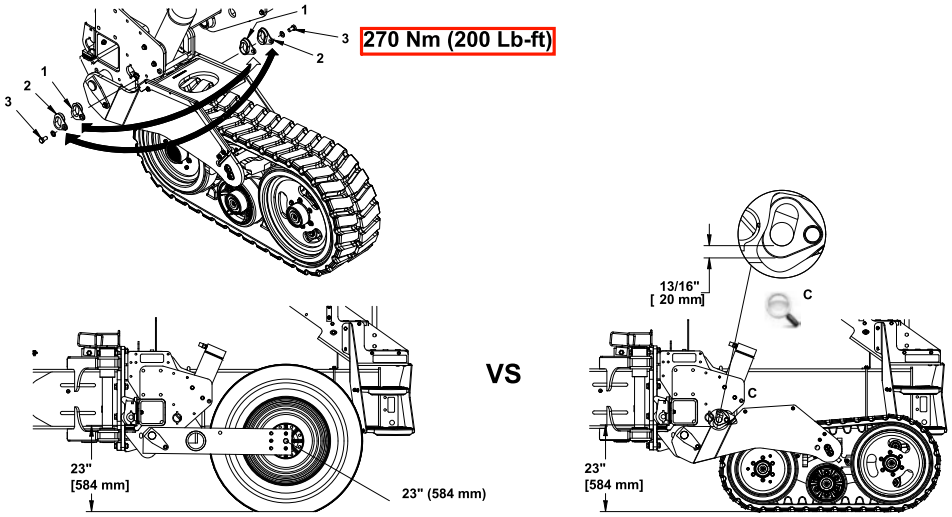

6.2.2 REMOVAL OF COMPONENTS / OUTER LIFT ARM – 24R30

⚠ CAUTION ⚠

WHEN THE PLANTER IS RAISED, MAKE SURE THAT IT IS PROPERLY SECURED / SUPPORTED TO PREVENT IT FROM ACCIDENTALLY FALLING DURING THE INSTALLATION OF THE TRACKS. IF NOT PROPERLY SECURED / SUPPORTED, SERIOUS PHYSICAL INJURIES COULD OCCUR.

NOTICE

ENSURE THAT THE PLANTER IS STABLE. SOUCY SUGGESTS LEAVING THE PLANTER HOOKED ON THE TRACTOR

1. Set the planter to transport mode.

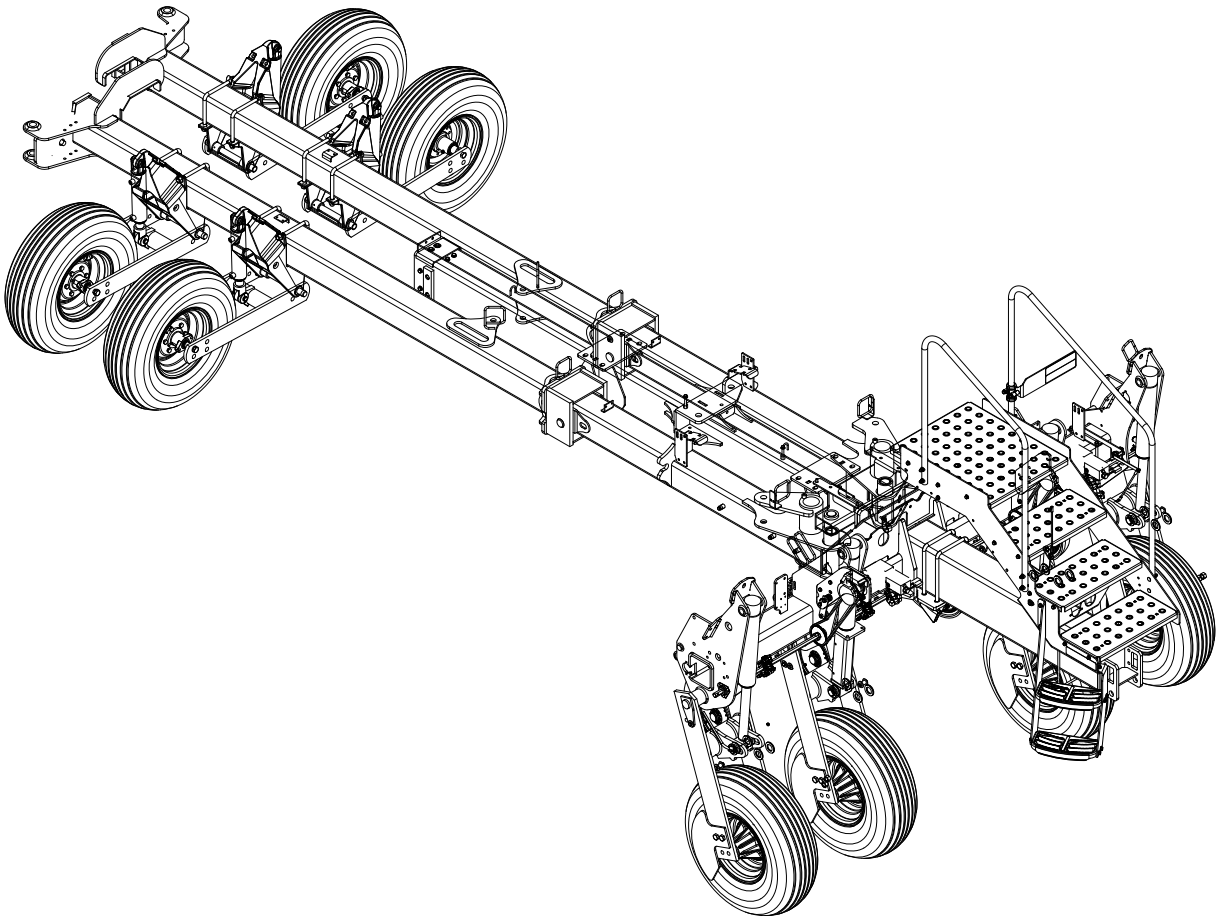

2. Install the service locks (A) according to the planter operator manual.

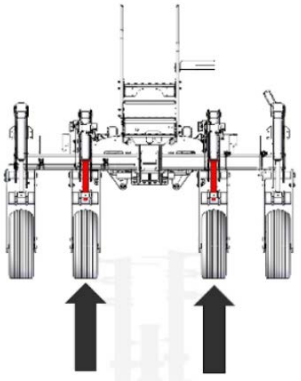

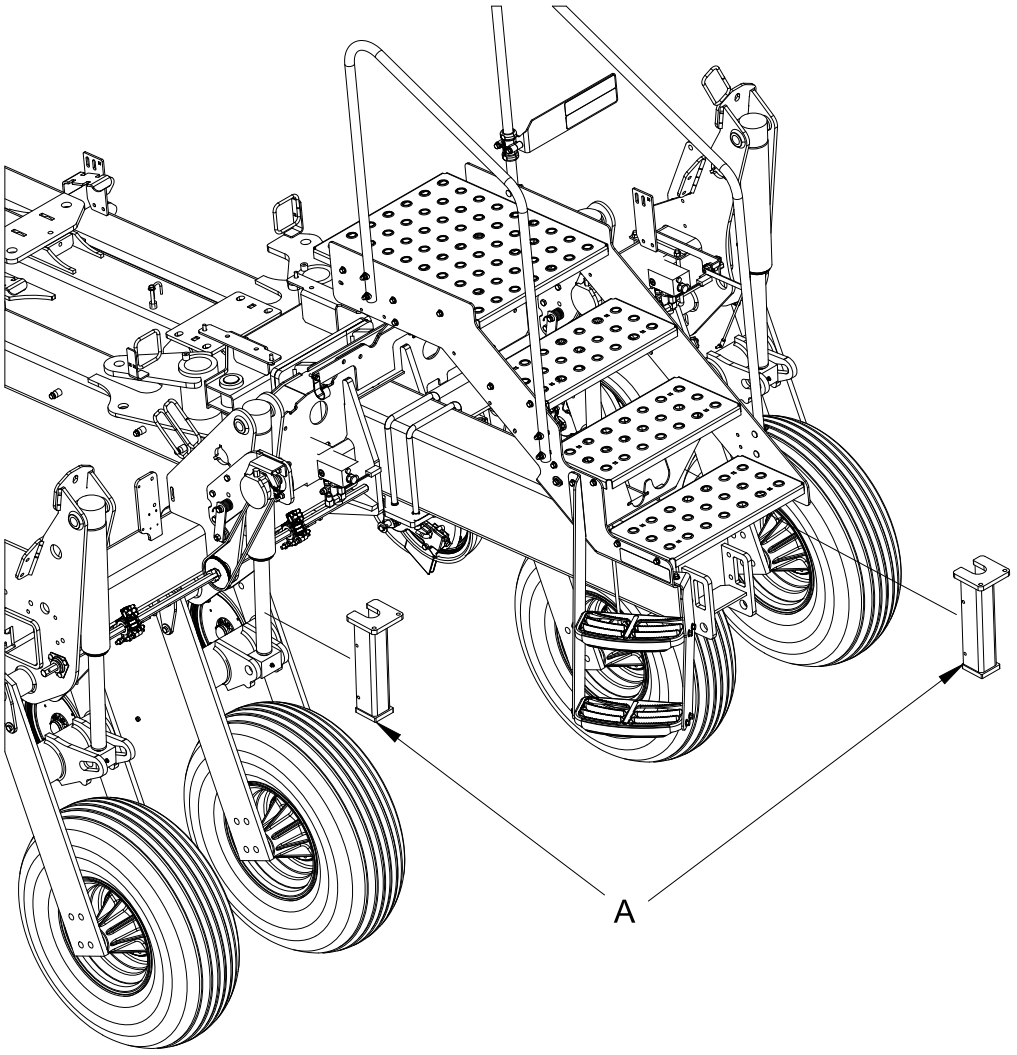

6.2.3 LADDER REMOVAL –24R30

1. Remove the ladder (B) with hardware (C, D).
   Keep them for later installation.

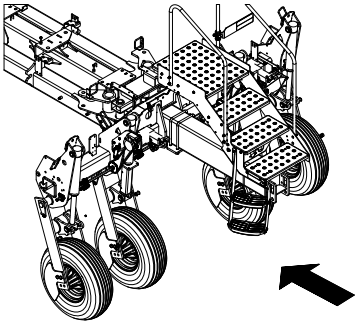

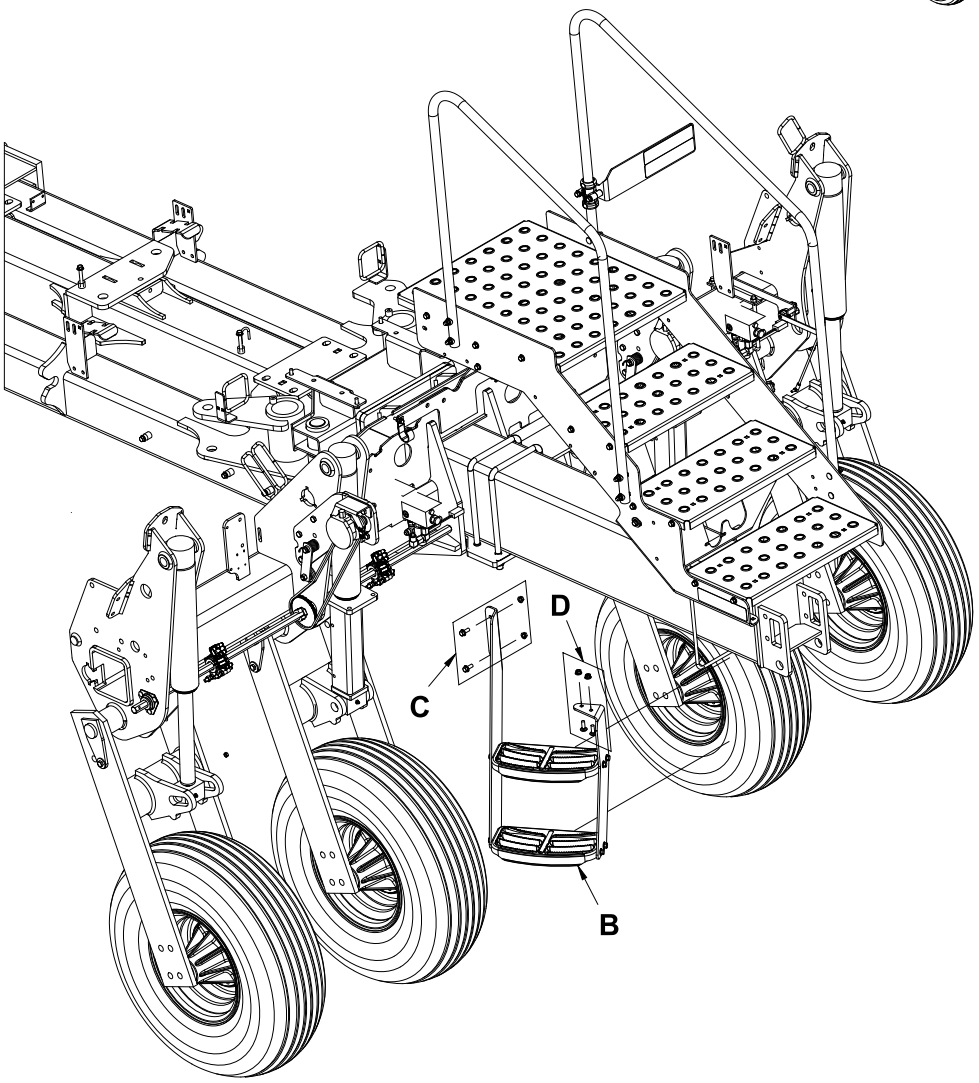

6.2.4 DISCONNECTION OF THE MOTION SENSOR –24R30

1. Disconnect the motion sensor harness.

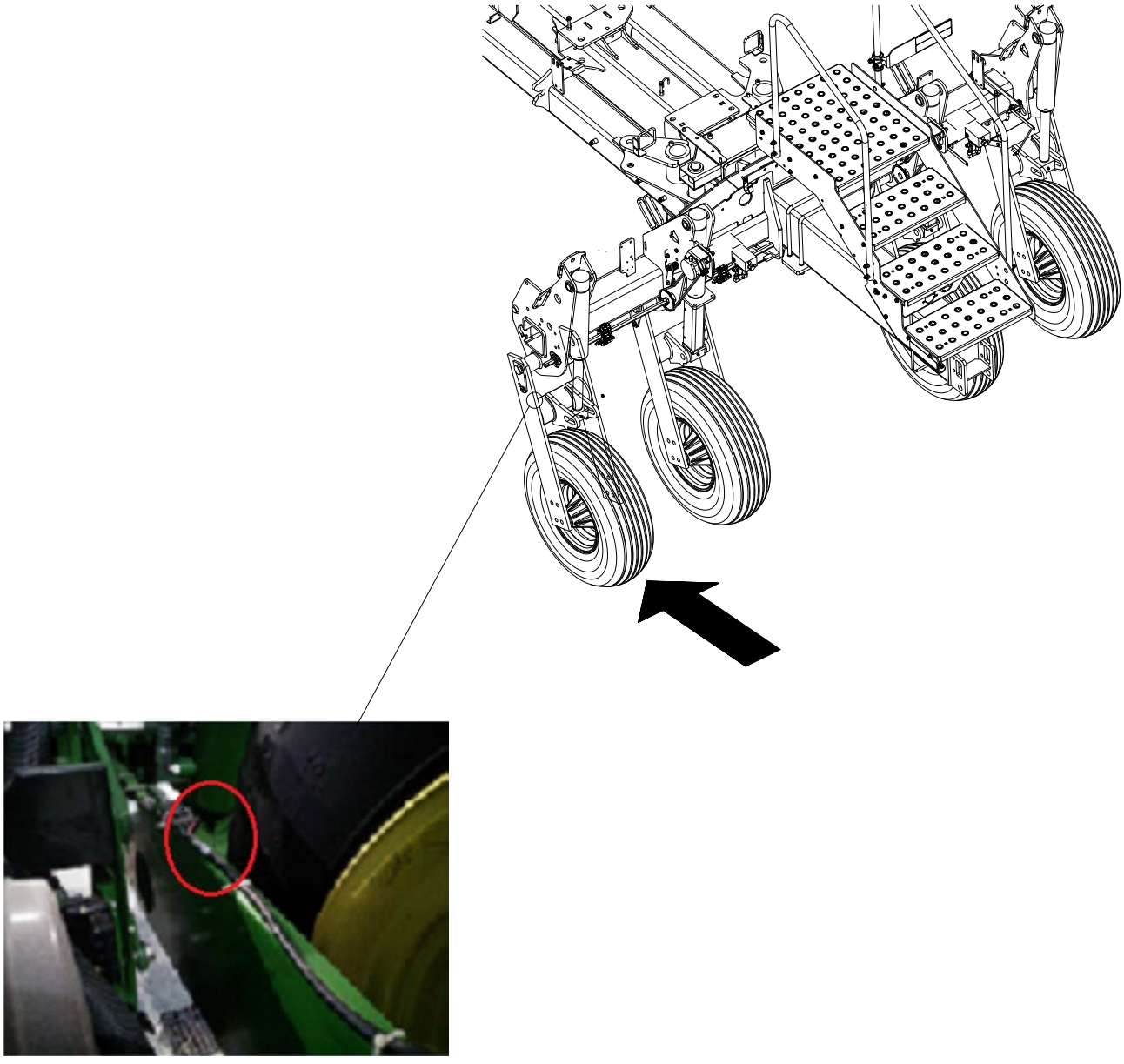

6.2.5 REMOVAL OF THE LIFT ARM –24R30

1. Remove the lift arm (M) and hardware (K, L).
   Keep them for later installation.

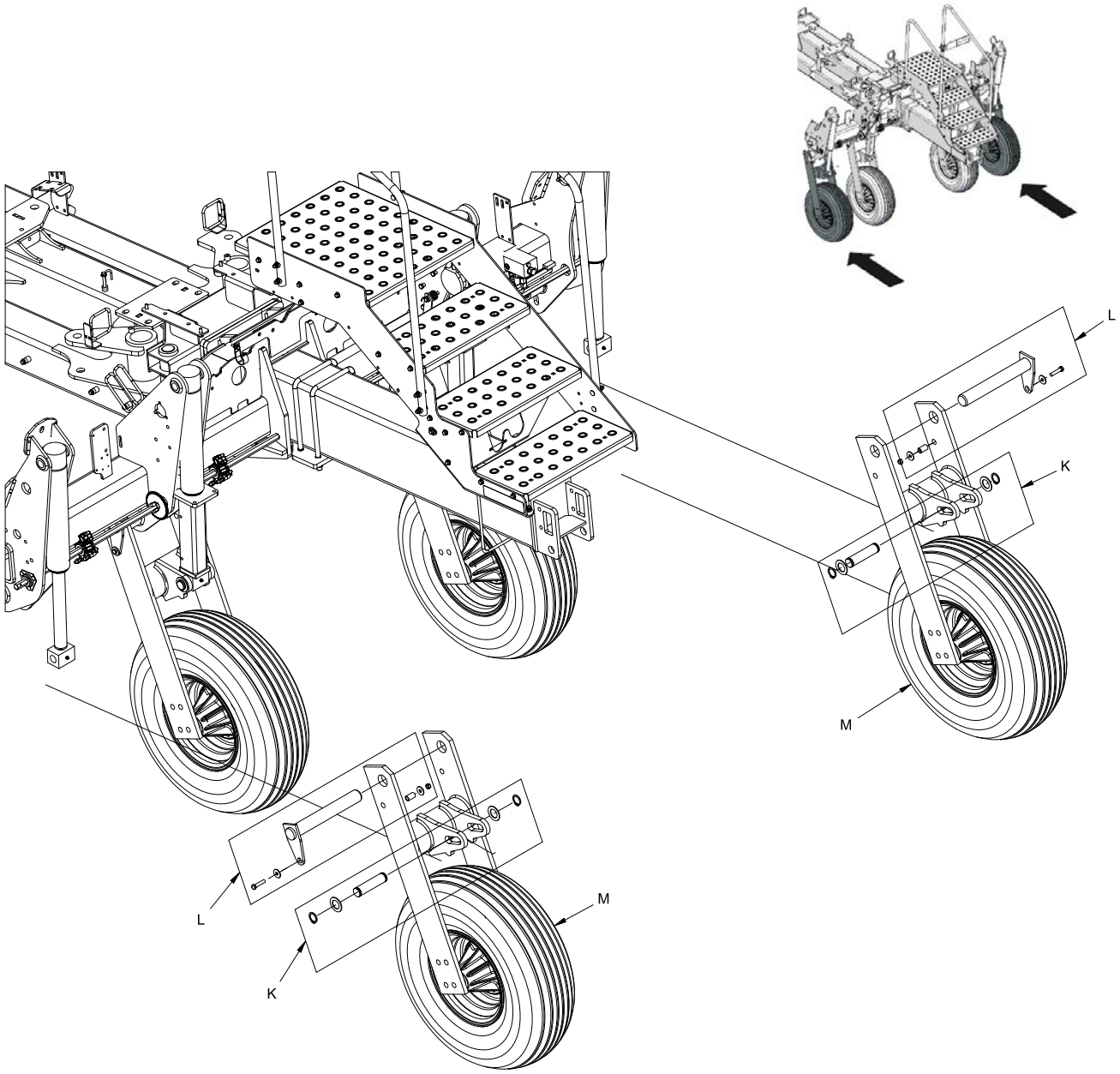

6.2.6 GROUND DRIVE OPTION



NOTICE

FOR PLANTERS EQUIPPED WITH A FACTORY-INSTALLED GROUND DRIVE SYSTEM (SEEDS OR FERTILIZER), REFER TO THE GROUND DRIVE INSTALLATION GUIDE BEFORE PROCEEDING TO TRACK INSTALLATION.





6.2.7 INSTALLATION OF OUTER LIFT ARM –24R30

1. Installs the lift arm (1, 2, 3) with hardware (L, K).
2. Apply Loctite 271 or equivalent, then torque bolts (L).

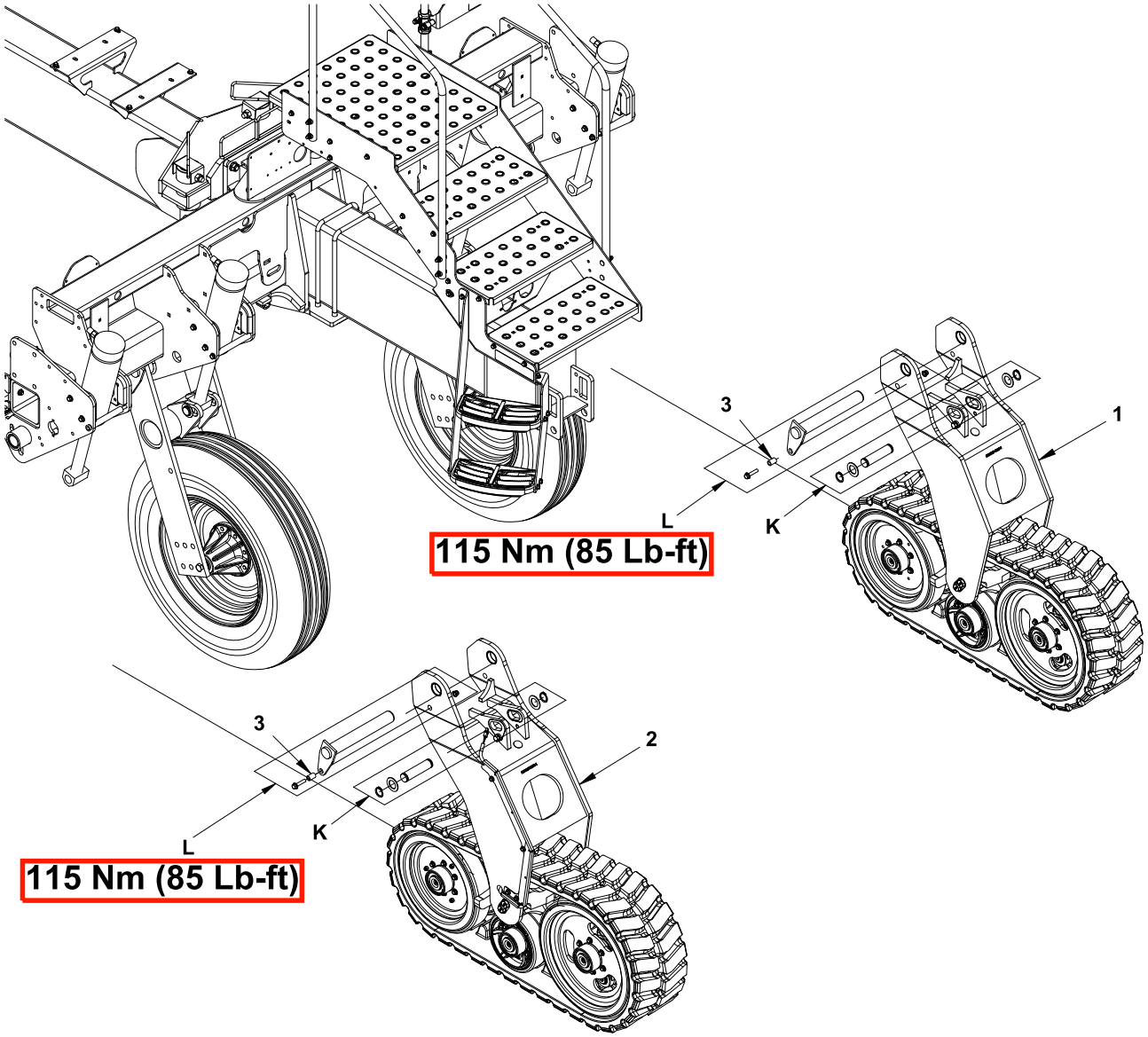

ITEM	PART#	QTY		ITEM	PART#	QTY
1	8032009-0070-4	1		3	8031029-0410-1	2
2	8032009-0080-4	1				

6.2.8 CONNECTION OF THE MOTION SENSOR –24R30

1. Reconnect the motion sensor harness.

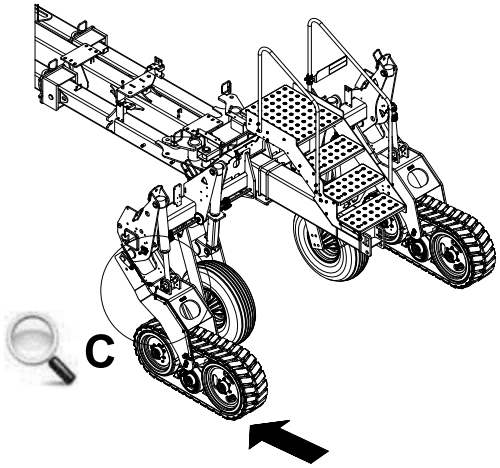

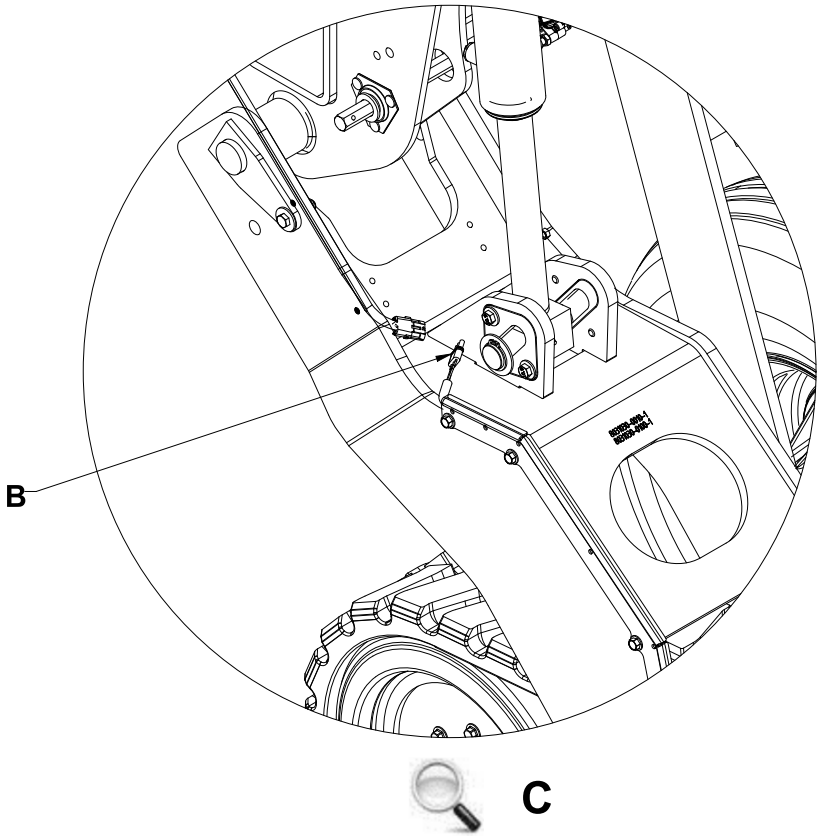

ITEM	DESCRIPTION
B	MOTION SENSOR CONNECTOR

6.2.9 REMOVAL OF COMPONENTS / CENTRE LIFT ARM –24R30

⚠ CAUTION ⚠

WHEN THE PLANTER IS RAISED, MAKE SURE THAT IT IS PROPERLY SECURED / SUPPORTED TO PREVENT IT FROM ACCIDENTALLY FALLING DURING THE INSTALLATION OF THE TRACKS. IF NOT PROPERLY SECURED / SUPPORTED, SERIOUS PHYSICAL INJURIES COULD OCCUR.

NOTICE

ENSURE THAT THE PLANTER IS STABLE. SOUCY SUGGESTS LEAVING THE PLANTER HOOKED ON THE TRACTOR

1. Install the service locks (A) according to the manufacturer's technical instructions

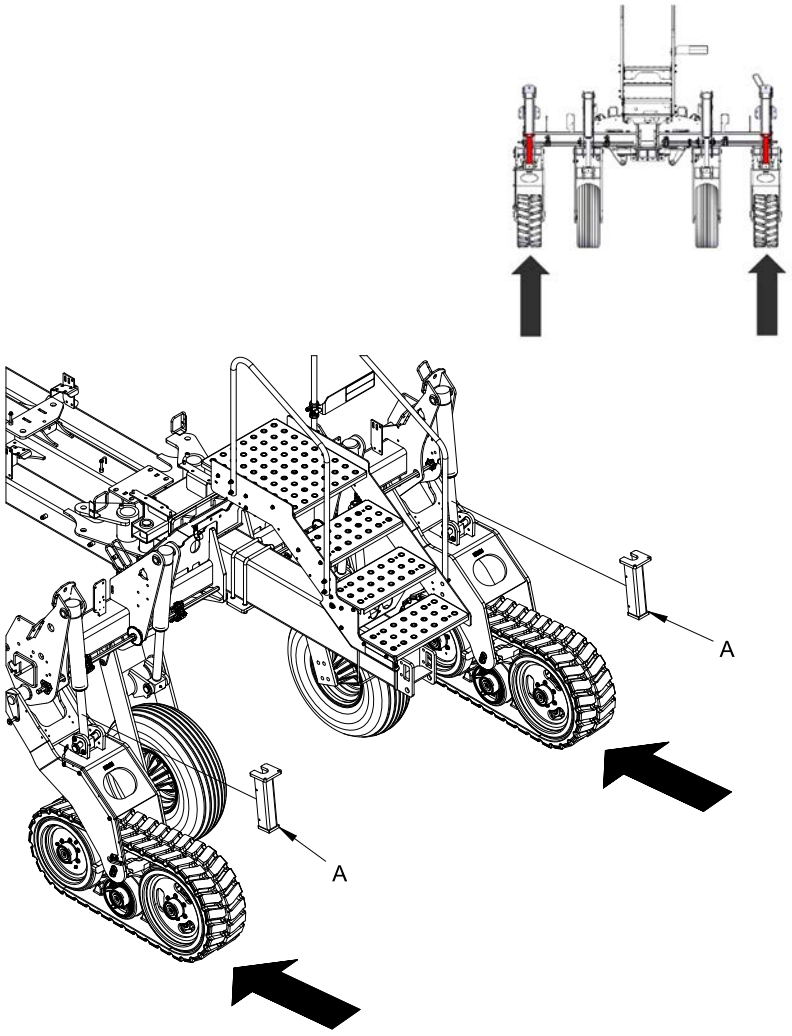

2. Remove the lift arm (M) and hardware (K) and lift arm pin (L).
   Keep them for later installation.

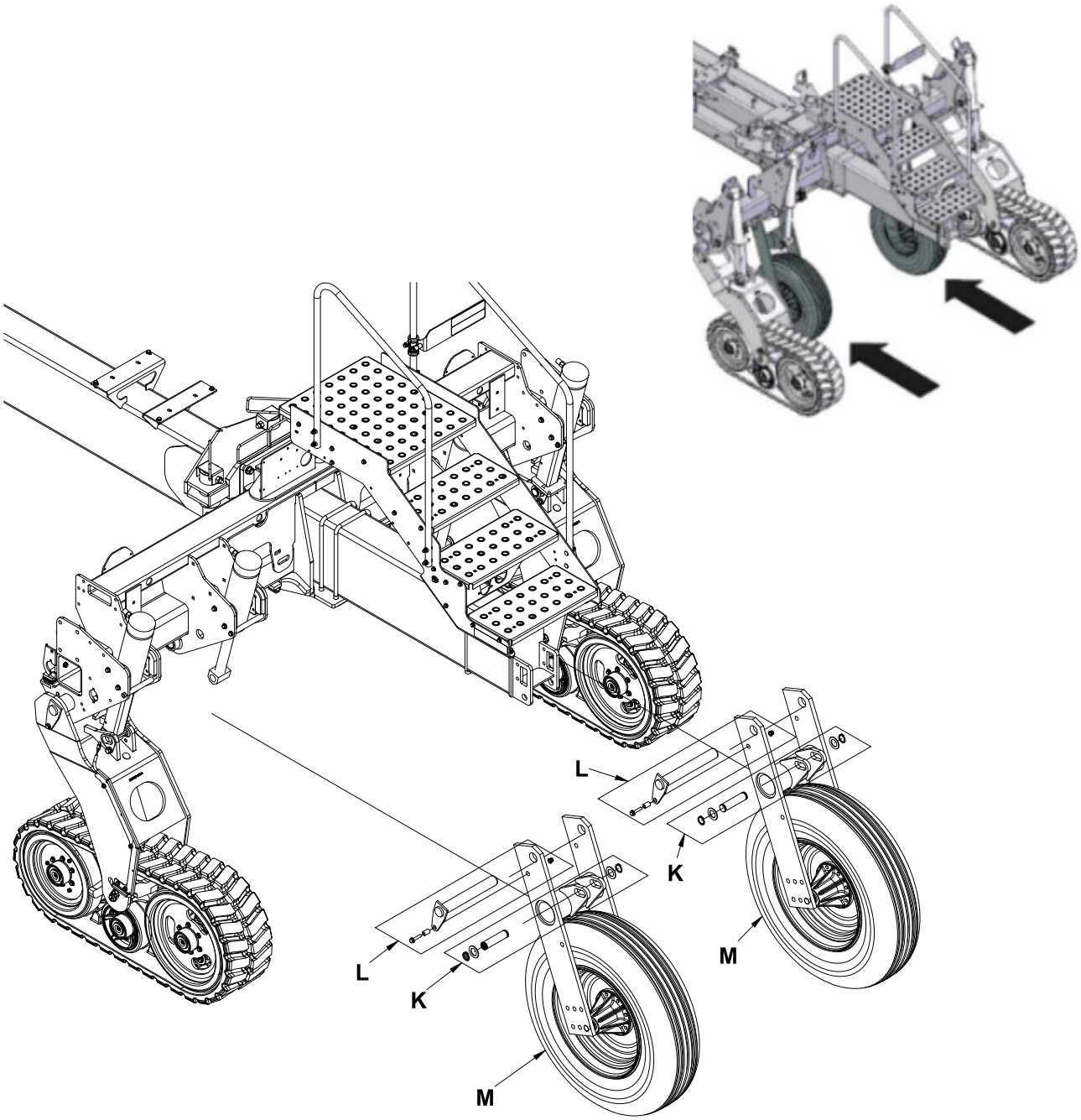

6.2.10 INSTALLATION OF CENTRE LIFT ARM –24R30

1. Install the lift arm (1, 2) with hardware (L, K).
2. Apply Loctite 271 or equivalent, then torque bolts (L).

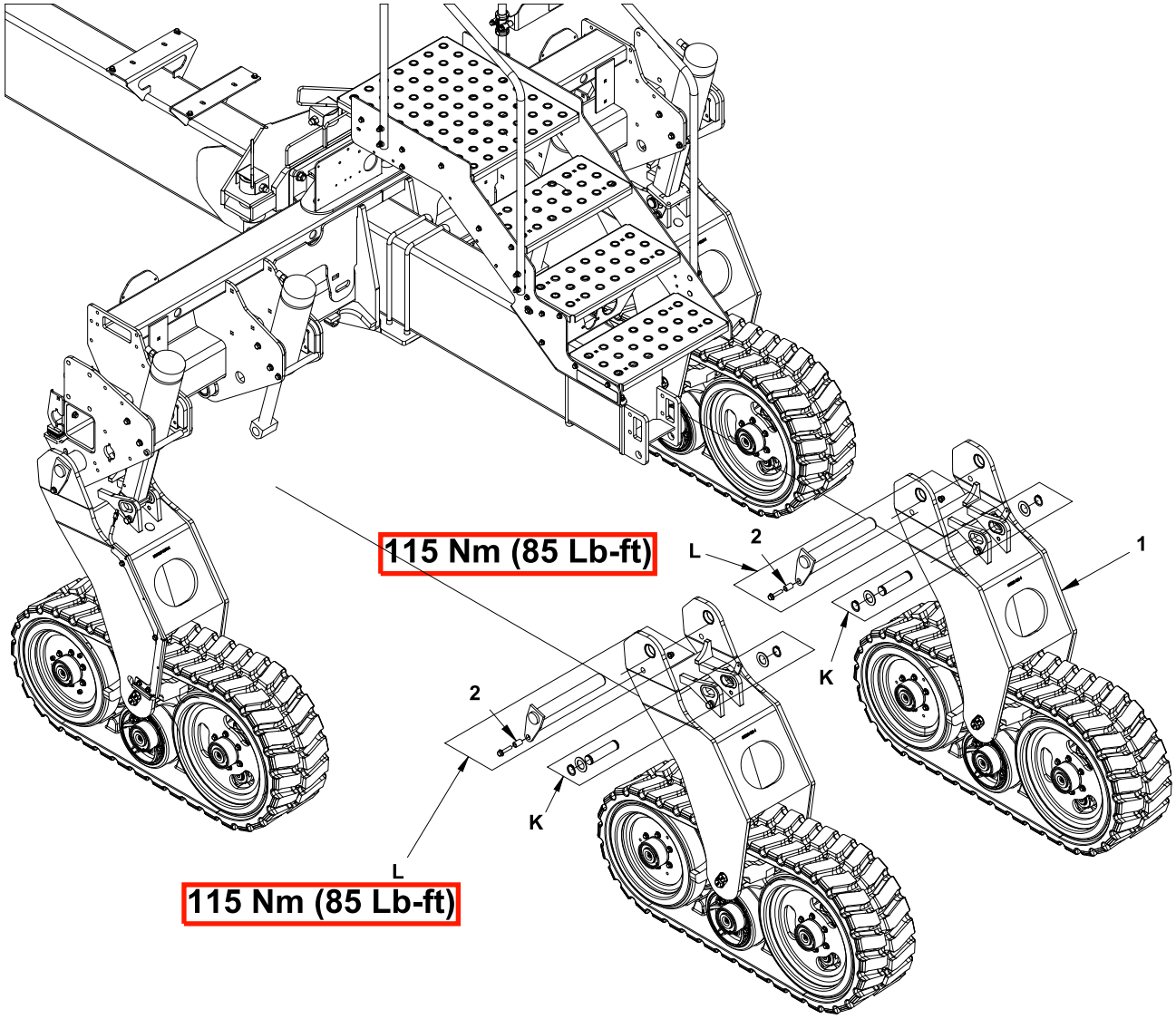

ITEM	PART#	QTY		ITEM	PART#	QTY
1	8032009-0070-4	2		2	8031029-0410-1	2

6.2.11 ADJUSTMENT OF THE HEIGHT SENSOR –24R30

1. Install and adjust the rod end (P) with nuts (N).
2. Torque nuts (N).

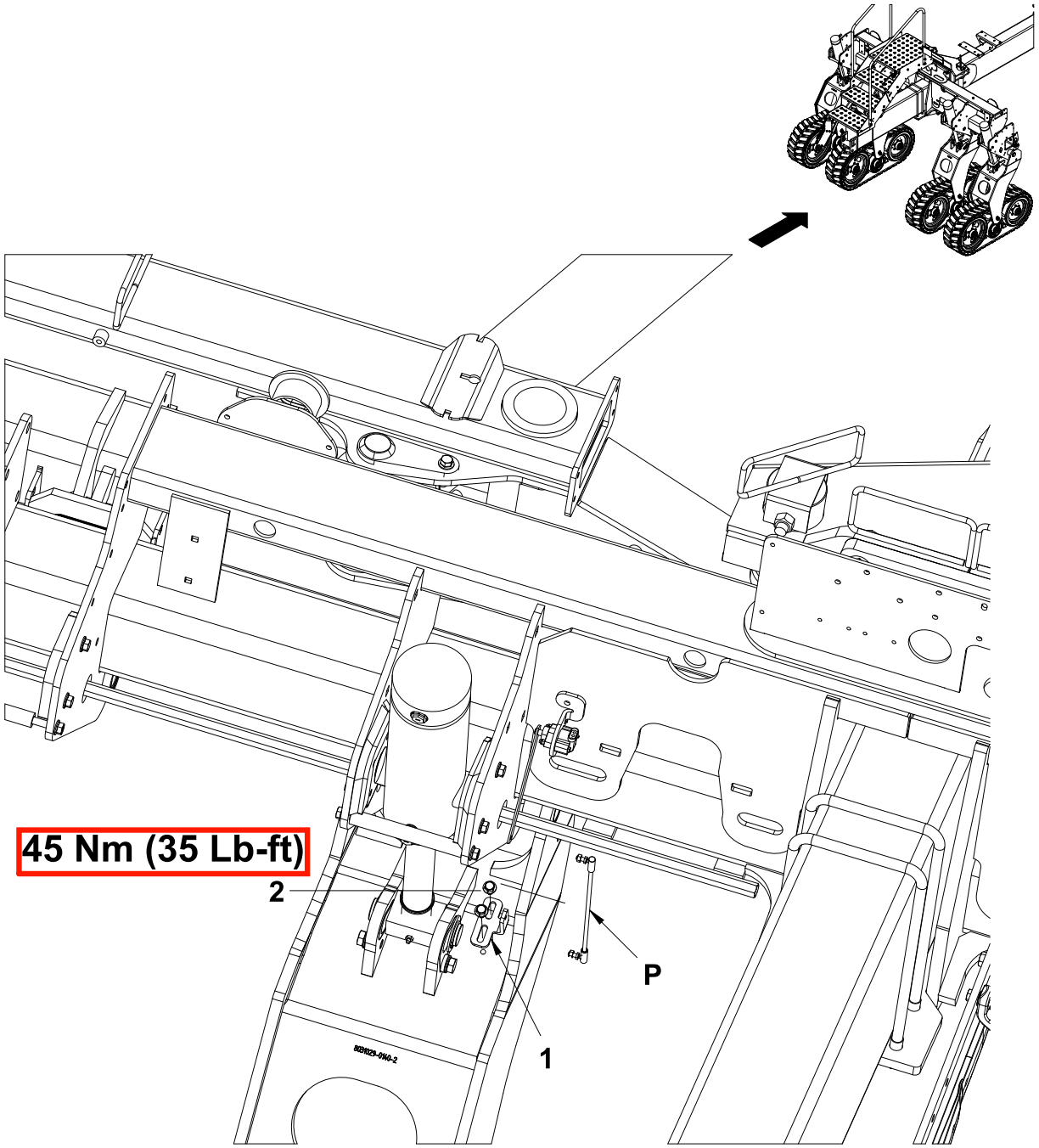

ITEM	PART#	QTY		ITEM	PART#	QTY
1	8031029-0070-1	1		2	S1114-10020-1D7	2

NOTICE

WHEN PLANTER IS AT MAXIMUM HEIGHT, SENSOR ROD (P) MUST BE CORRECTLY ADJUSTED TO PREVENT CONTACT WITH THE SEED DRIVE HEX SHAFT (Q).

NOTICE

AFTER INSTALLATION, CALIBRATE THE HEIGHT SENSOR ACCORDING TO THE MANUFACTURER'S OPERATOR MANUAL ("***CALIBRATE COMMON START AND STOP HEIGHT" OR " CALIBRATE SEPARATE START AND STOP" HEIGHT***) PROCEDURE

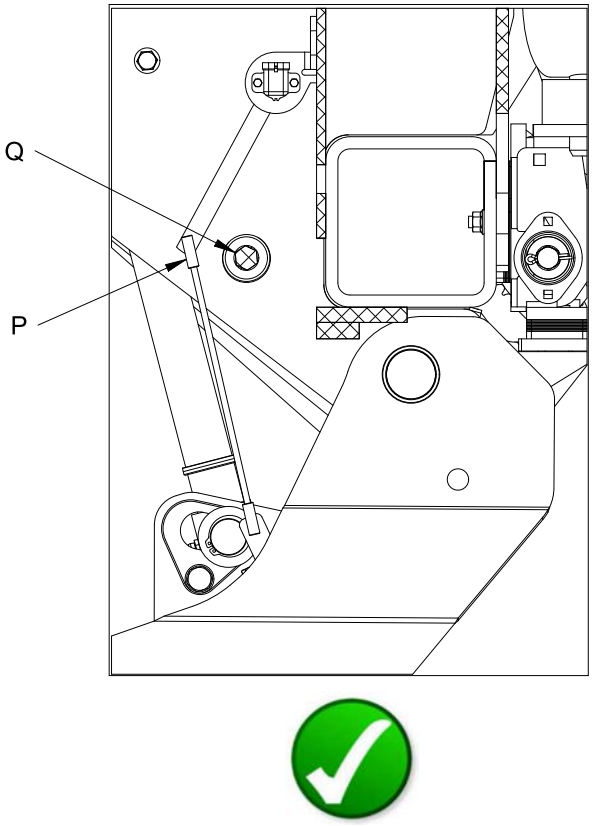

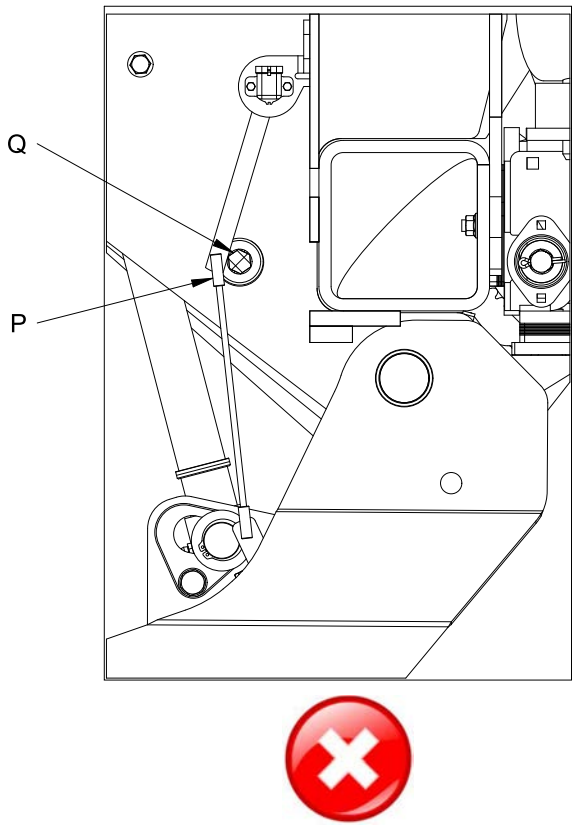

6.2.12 REINSTALLATION OF THE LADDER –24R30

1. Remove and discard the OEM ladder plate (W, X).
2. Install the ladder plate (1, 2) on the steps with hardware (V).
3. Apply Loctite 271 or equivalent, then torque bolts (V).

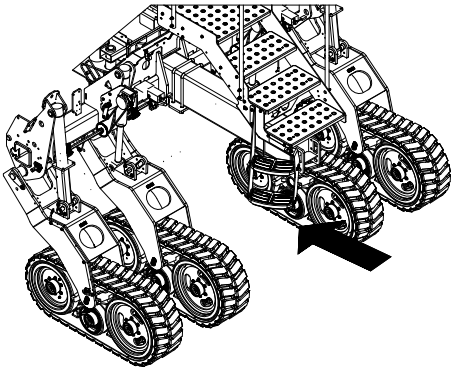

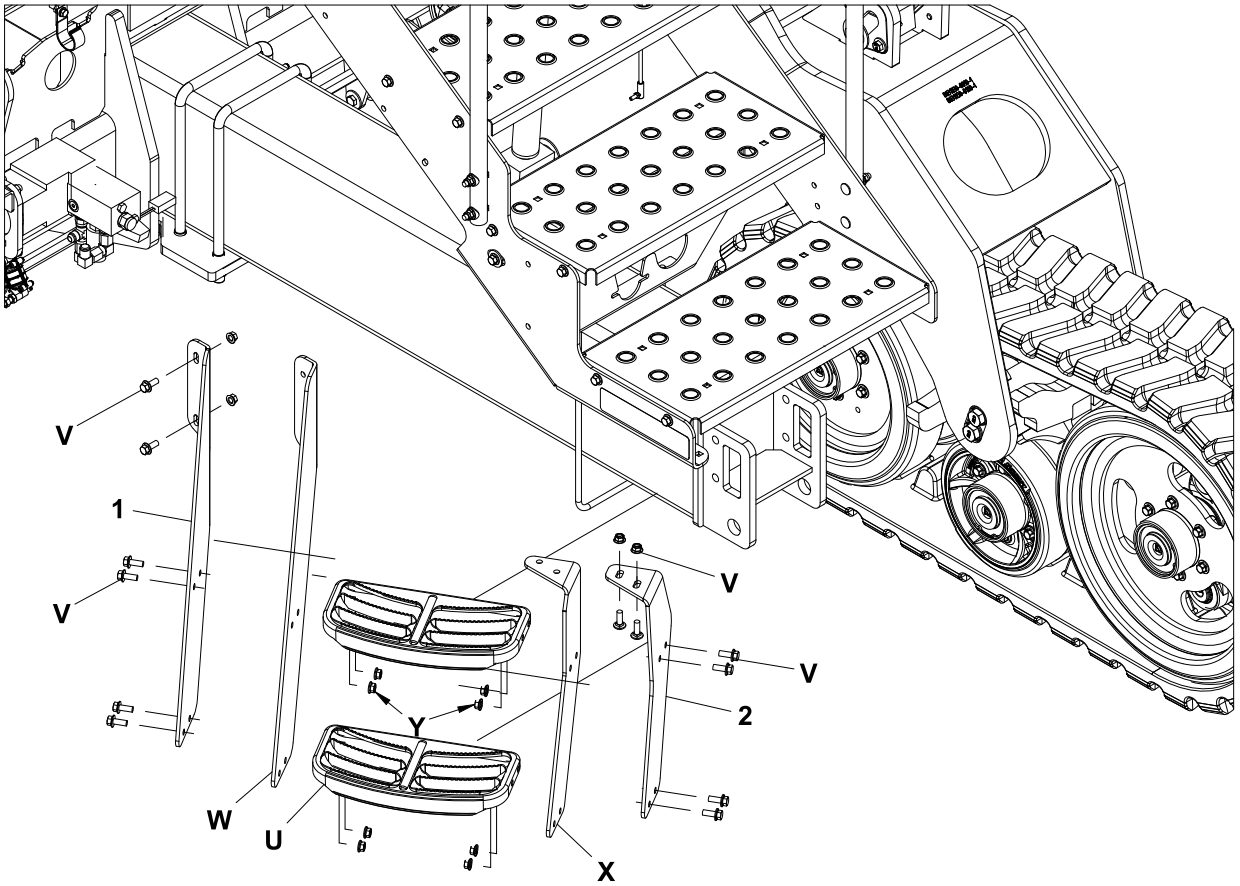

ITEM	PART#	QTY		ITEM	PART#	QTY
1	8031029-0340-1	1		2	8031029-0350-1	1

6.2.13 REMOVAL OF THE SERVICE LOCK –24R30

1. Remove service locks (A) before use.

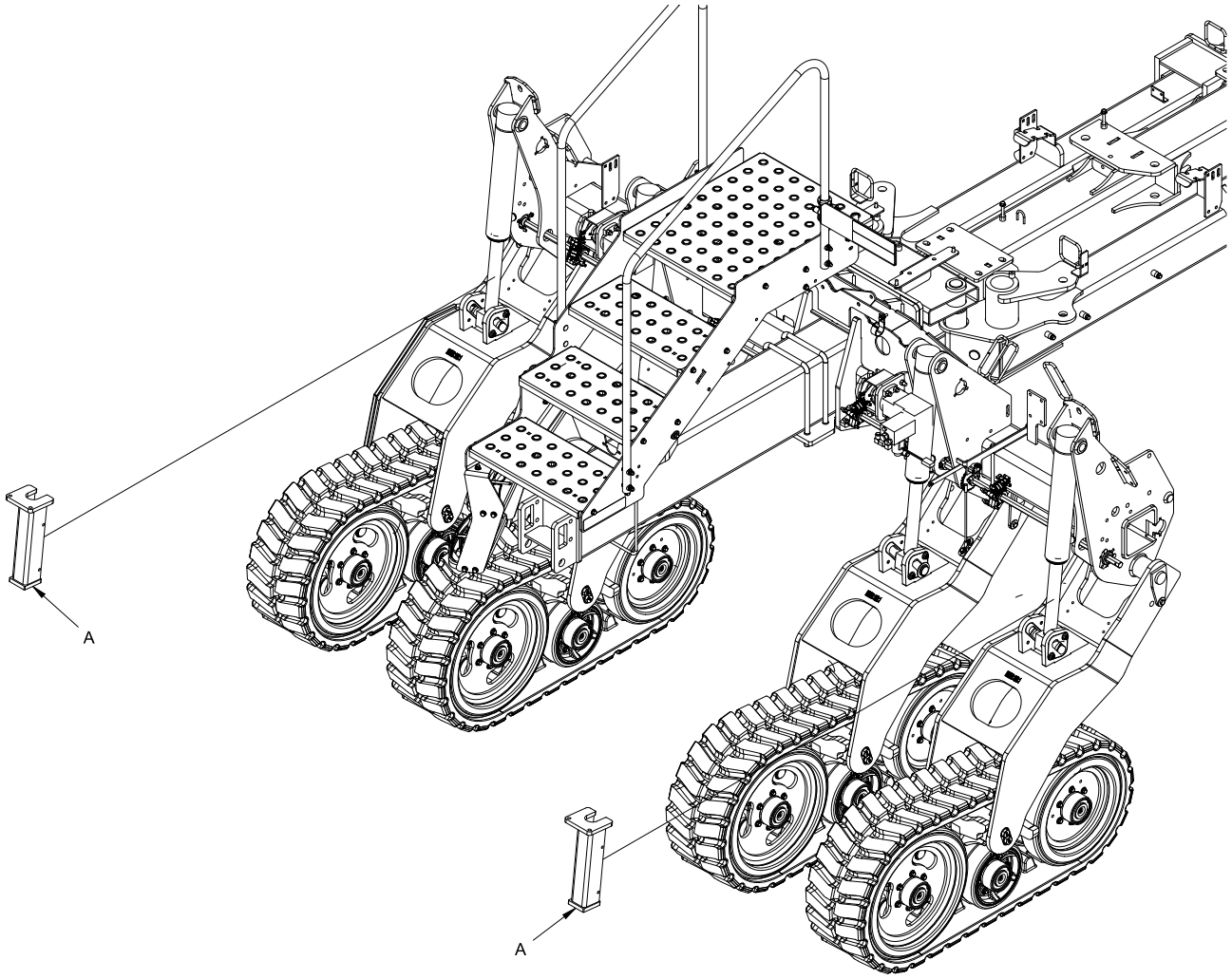

SECTION 7 ROAD TEST AND FINAL ADJUSTMENTS OF THE TRACK SYSTEM

7.1 CLEARANCE VERIFICATION

⚠ CAUTION ⚠

- **WHEN THE PLANTER IS RAISED, MAKE SURE THAT IT IS PROPERLY SECURED / SUPPORTED TO PREVENT IT FROM ACCIDENTALLY FALLING DURING THE INSTALLATION OF THE TRACKS. IF NOT PROPERLY SECURED / SUPPORTED, SERIOUS PHYSICAL INJURIES COULD OCCUR.**
- MAKE SURE NO ONE IS IN THE DANGER ZONE OF THE VEHICLE WHILE THE ENGINE IS RUNNING OR THE VEHICLE IS MOVING.
- NEVER MODIFY A STRUCTURAL SECTION OF THE TRACK SYSTEM AND THE PLANTER FRAME. IT COULD RESULT A MAJOR FAILURE.

NOTICE

DUE TO THE NUMEROUS ATTACHMENTS AND ACCESSORIES THAT CAN BE USED WITH THE PLANTER, SOUCY TRACK CANNOT GUARANTEE THAT THERE WILL BE NO INTERFERENCE.

1. Lower and lift the planter, check for possible interference in the zone specified below:
   - Between Track system and rows cleaner (See Note A).
   - Between Track system and planting units (See Note B).
   - Between Track system and a hydraulic hose or electric harness (See Note C).

Figure 7.1 S-TECH 012P CLEARANCE CHECK

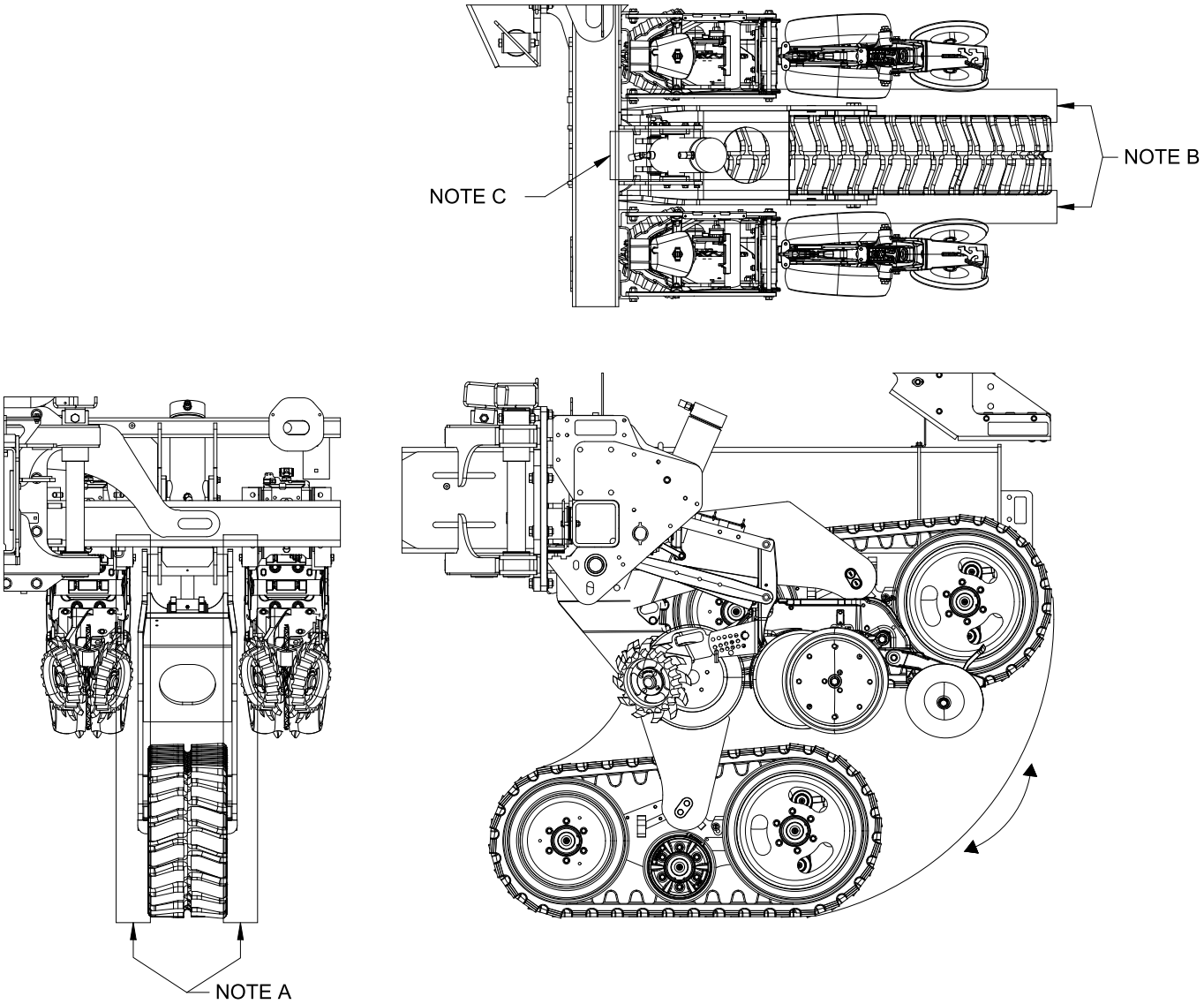

2. If there is minor interference, do the following actions:
   - Adjust the position of planting units by loosening the U-bolts. Move it to obtain a 3/16" (5mm) clearance.
   - Change the position of the part that is interfering.
   - If possible, re locate the part that is interfering .
   - Secure cables, the hose or other interfering parts with adequate tie wraps.
3. If any major interference, contact your Soucy Track dealer.

7.2 ADJUSTMENT OF THE TRACK TENSION

NOTE

- **Tracks are factory adjusted.**
- Refer to the maintenance chart for more information about the frequency of track adjustment
- If an adjustment is required, follow the sequence below.

1. Put a tractor behind the planter close enough, in order to make an hydraulic outlet connection.

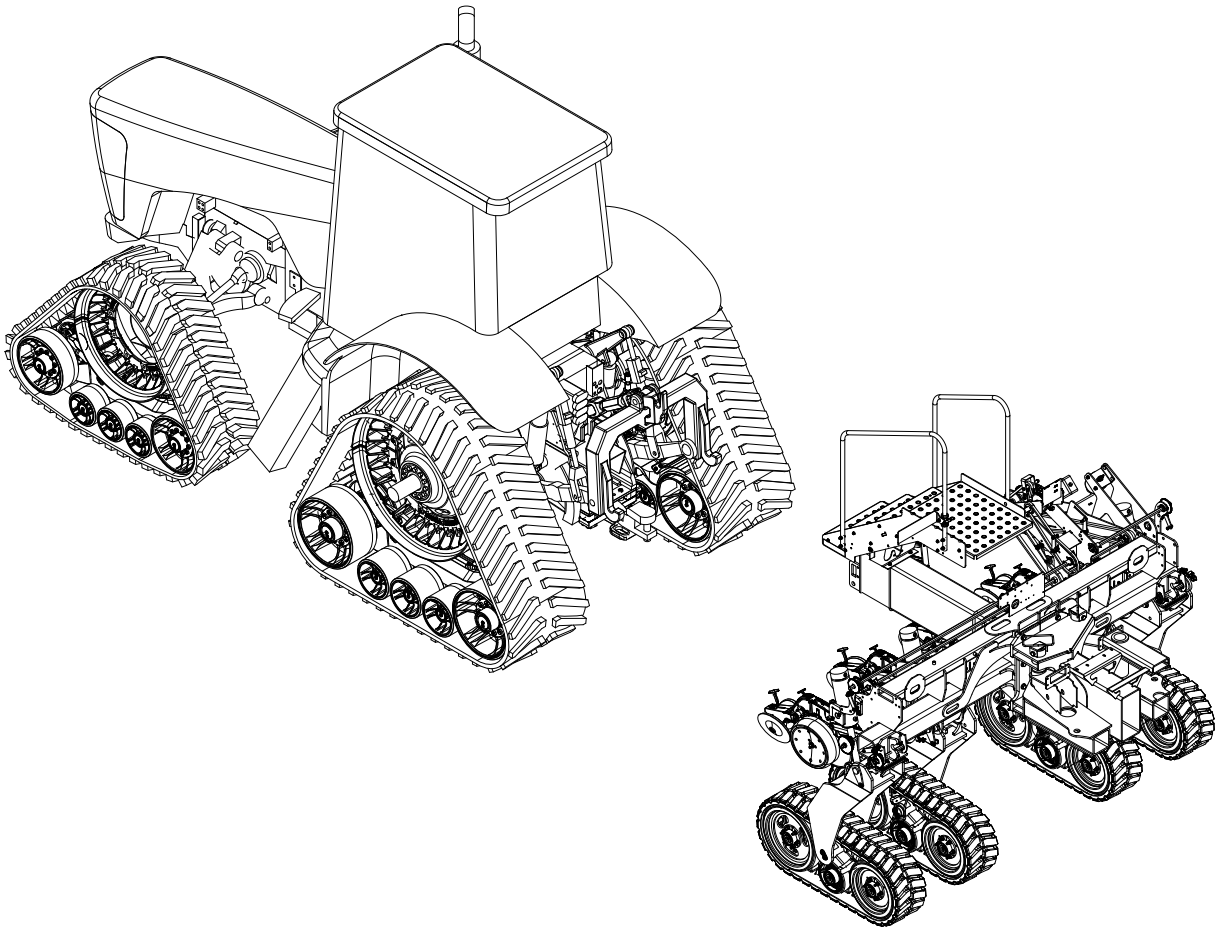

2. Remove the dust cap (A) from the hose.
3. Verify that the needle valve (C) is fully closed.

Figure 7.2 HYDRAULIC FILLING HOSE (SPT-0008–1)

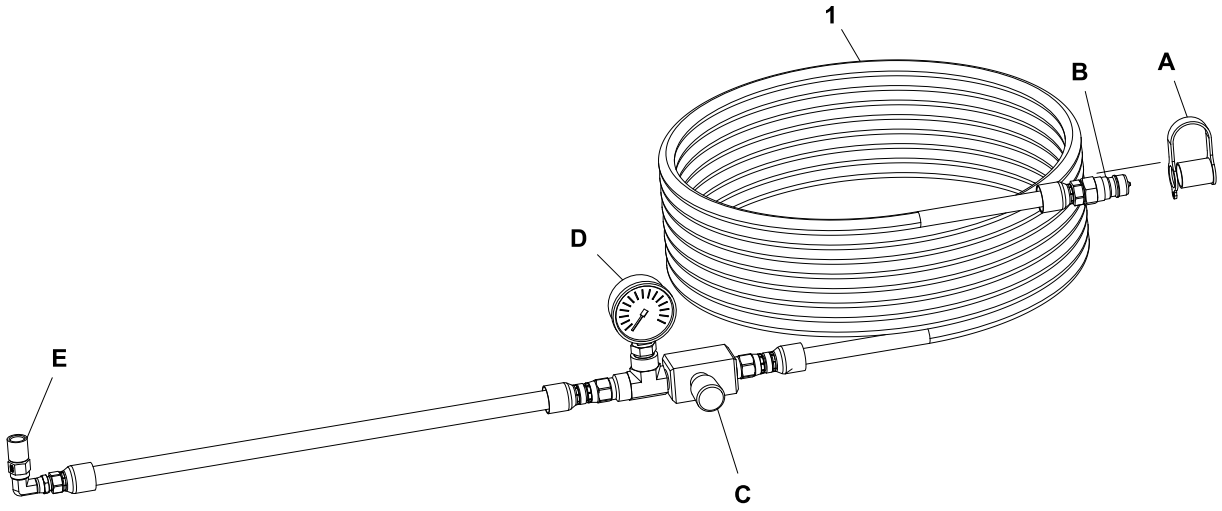

4. Install the quick connect (B) of the filling hose in an hydraulic outlet on the tractor.



7.3 FILLING HOSE BLEEDING SEQUENCE

1. Place the other extremity of the filling hose (E) into a bucket (F).
2. With the help of a second person in the tractor, activate the appropriate hydraulic outlet.
3. Open slowly (1/8 turn) the needle valve (C). At this moment oil flows in the system and air can exit by the fillng hose.
4. When oil flows without air bubble through the filling hose, close the needle valve (C) and stop the tractor hydraulic activation.

Figure 7.3 BLEEDING SEQUENCE

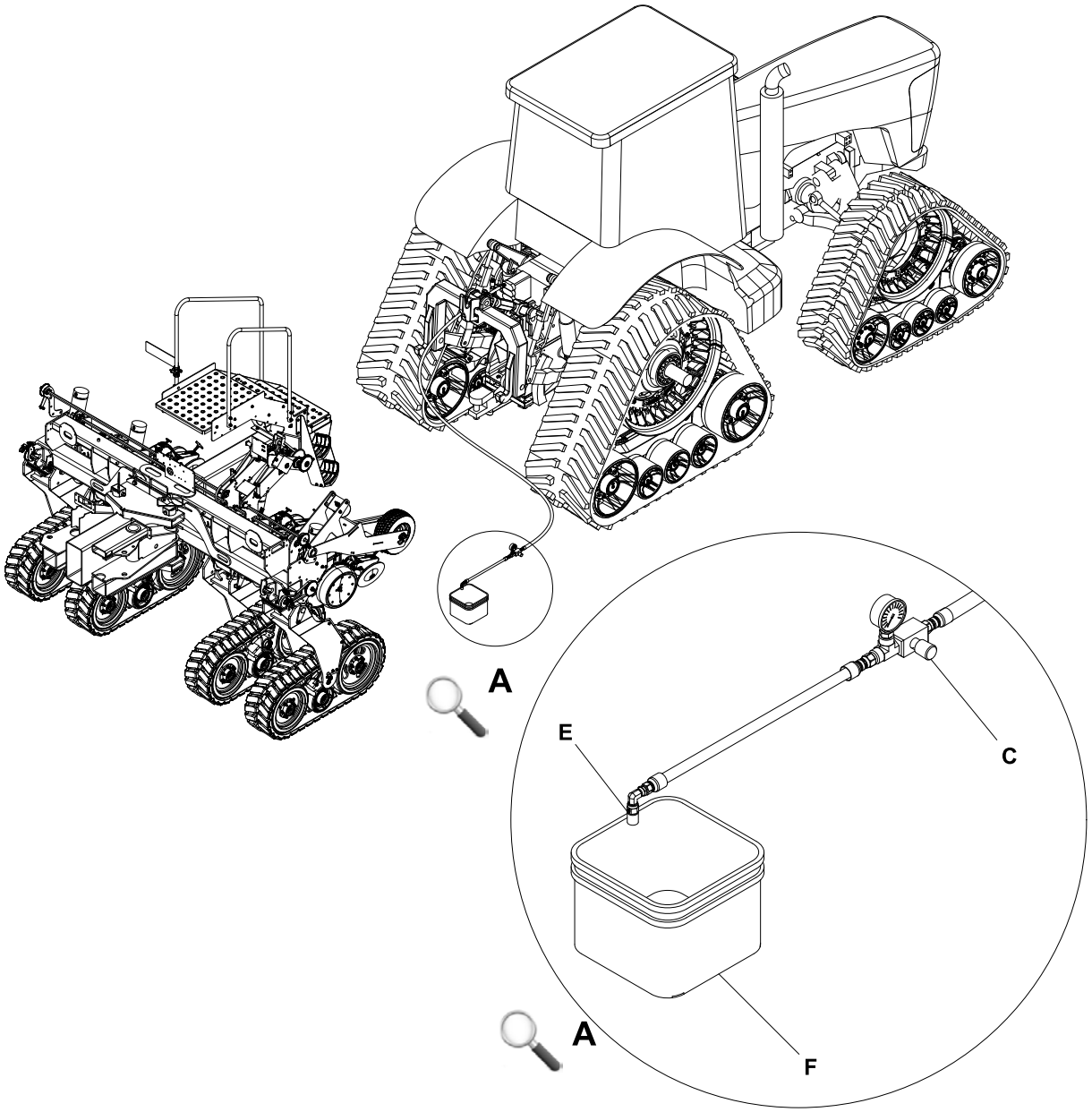

7.4 HYDRAULIC LOADING SEQUENCE

1. On a flat surface, raise the planter to the maximun height (transport mode).

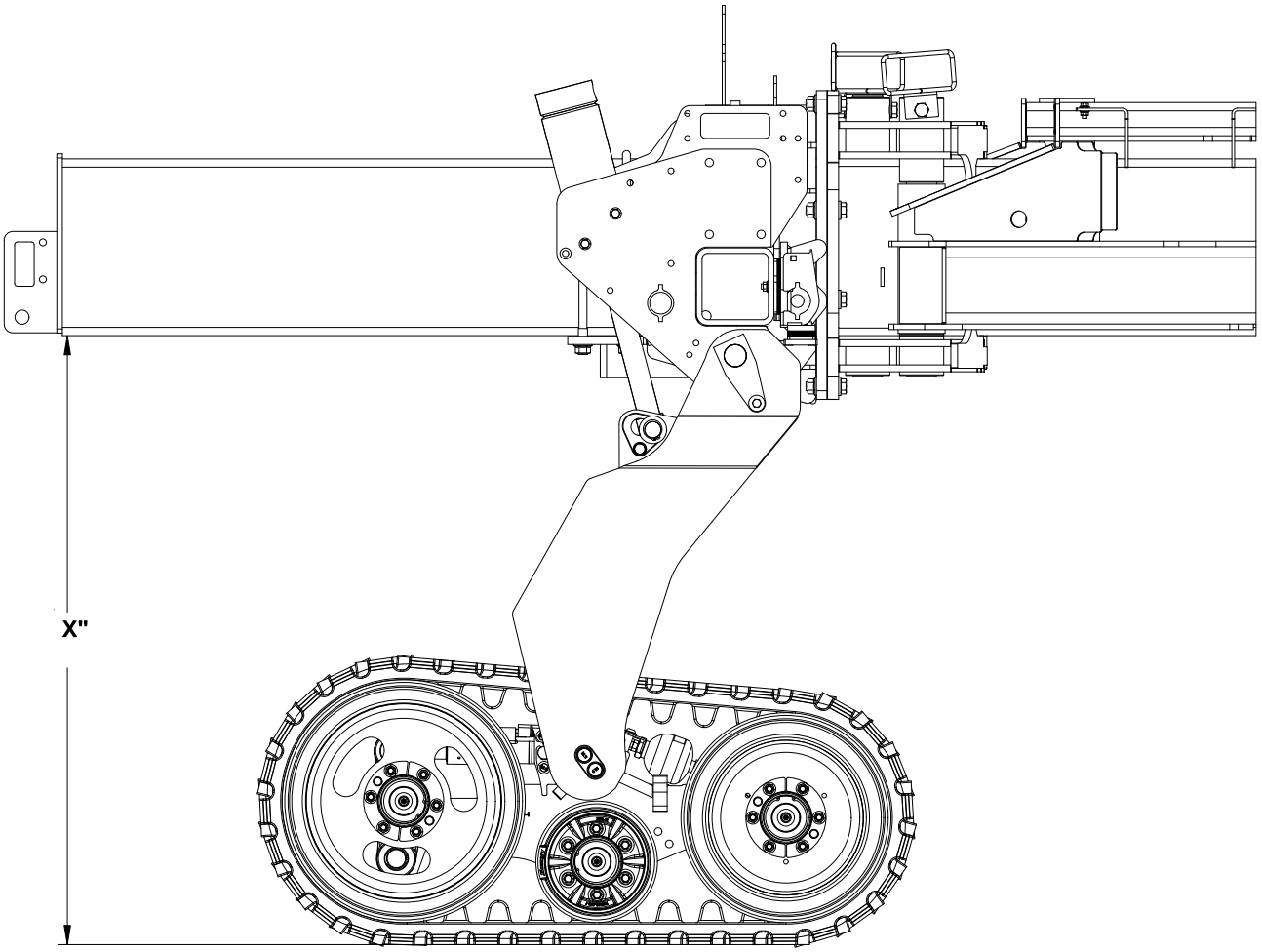

2. Remove the protector cap (G). Connect the filling hose connector (E) on the male coupler of track system hydraulic module (2).
3. With the help of a second person in the tractor, activate the appropriate hydraulic outlet.
4. Open slowly (1/8) of turn the needle valve (C). At this moment, the pressure in the hydraulic system increases.
5. When the pressure has reached 1400-1500 PSI / 9650-10350 kPa on the pressure gauge (D), close the needle valve (C) and stop the tractor hydraulic activation.
6. Wait 30 seconds to see if the pressure stays stable.
7. If necessary, adjust the pressure a second time.
8. Remove the filling hose connection (E) and reinstall the protector cap (G).

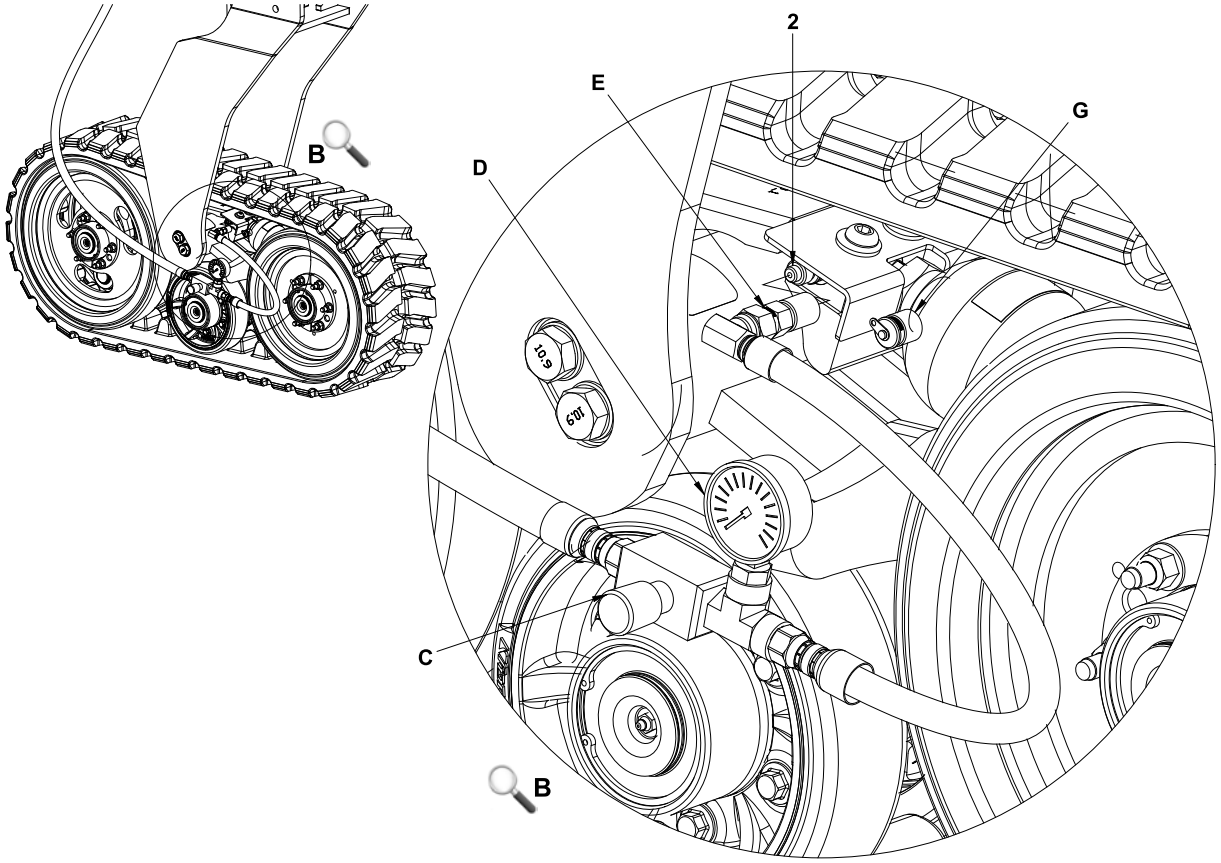

ITEM	PART#	QTY		ITEM	PART#	QTY
2	8035008-0010-1	1				

9. Repeat the procedure for all track system on the planter.
10. When all systems are adjusted to the right pressure, check each hydraulic module and hose to ensure there is no leakage.
11. Verify the hydraulic level in the tractor and add oil if necessary.

7.5 HYDRAULIC UNLOADING SEQUENCE

1. Begin the procedure by referring to the HYDRAULIC PRESSURE PROCEDURE.
2. On a flat surface, raise the planter to the maximun height (transport mode).

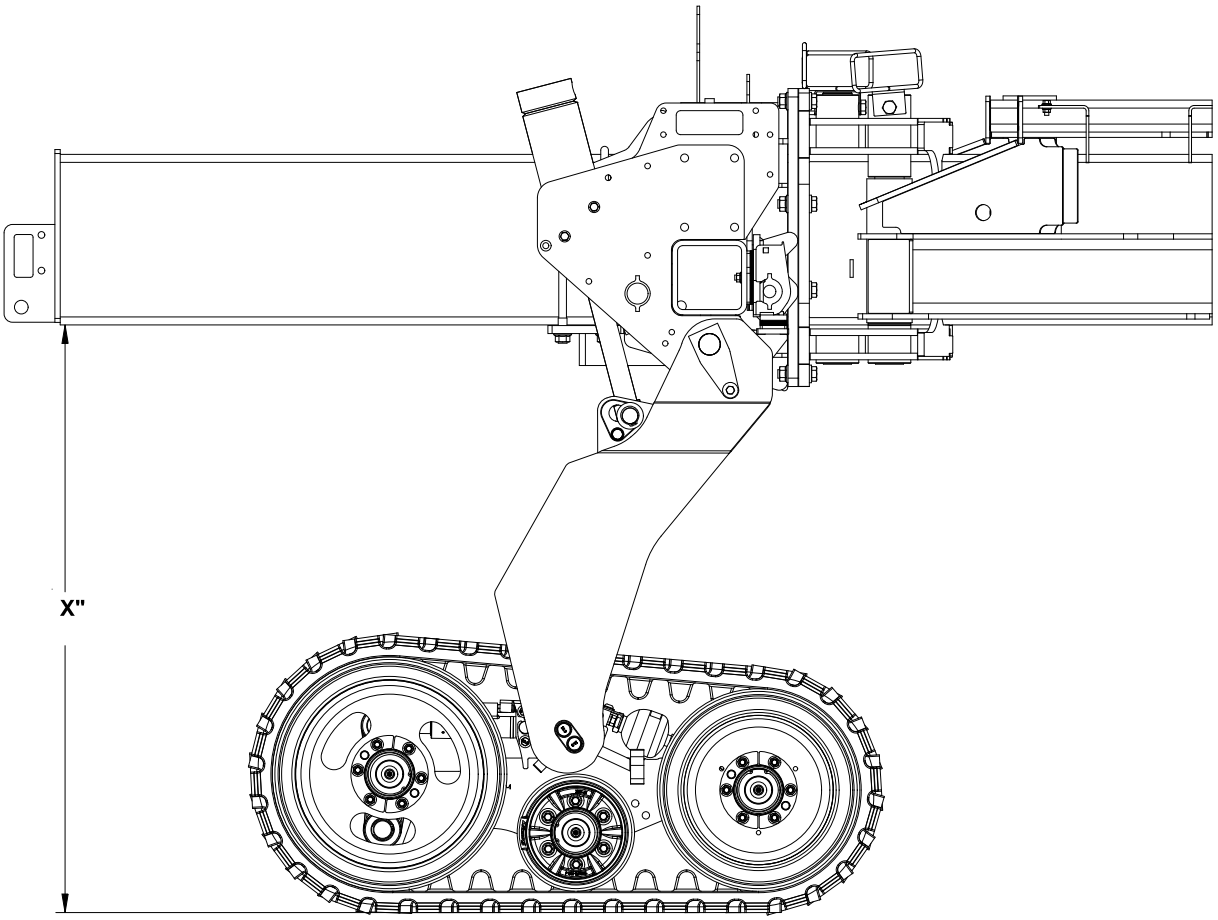

3. Remove the protector cap (G). Connect the filling hose connector (E) on the male coupler of track system hydraulic module (2).
4. With the help of a second person in the tractor, activate the hydraulic pump on unloading mode.
5. Open slowly (1/8) of turn the needle valve (C). At this moment, the pressure in the hydraulic system decreases.
6. Remove the filling hose connection (E) and reinstall the protector cap (G).

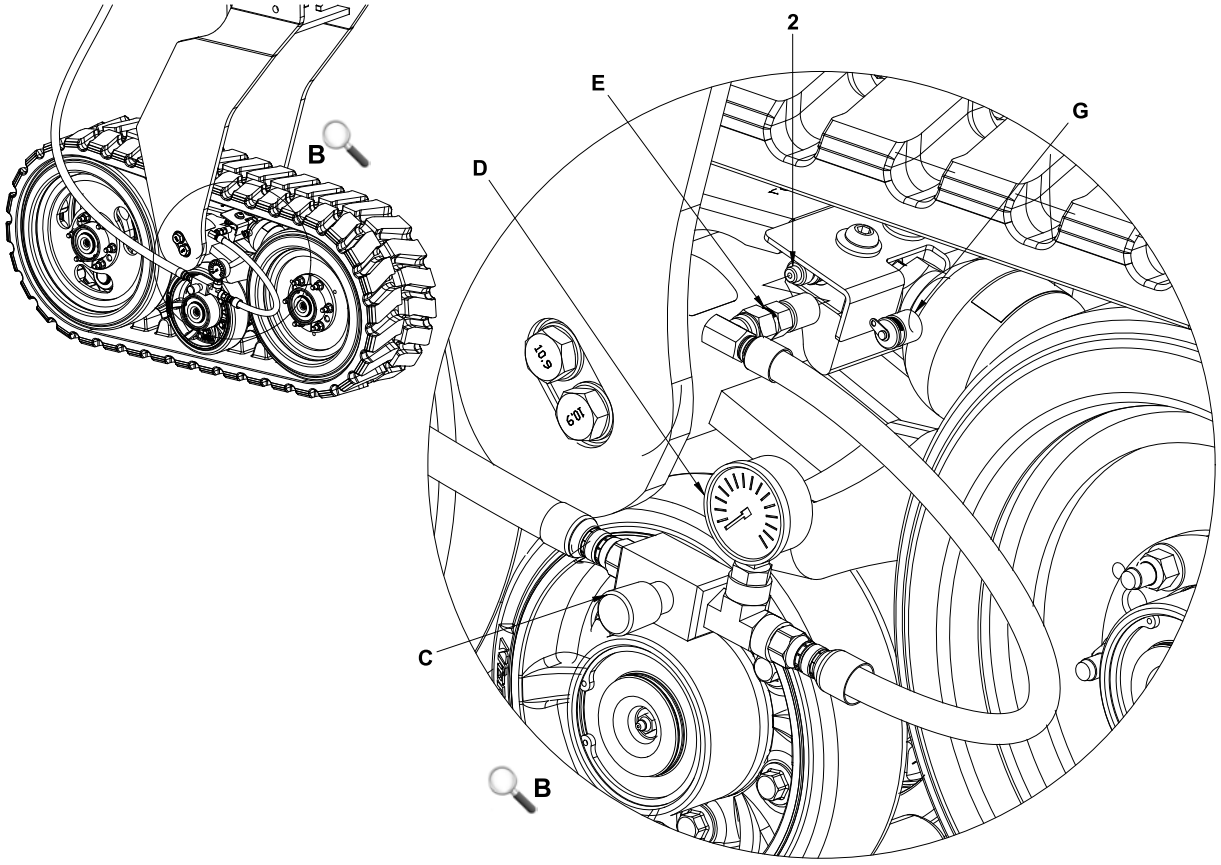

ITEM	PART#	QTY		ITEM	PART#	QTY
2	8035008-0010-3	1				

7.6 HYDRAULIC PRESSURE VERIFICATION

1. Begin the procedure by referring to the HYDRAULIC PRESSURE PROCEDURE and FILLING HOSE BLEEDING SEQUENCE.
2. On a flat surface, raise the planter to the maximun height (transport mode).

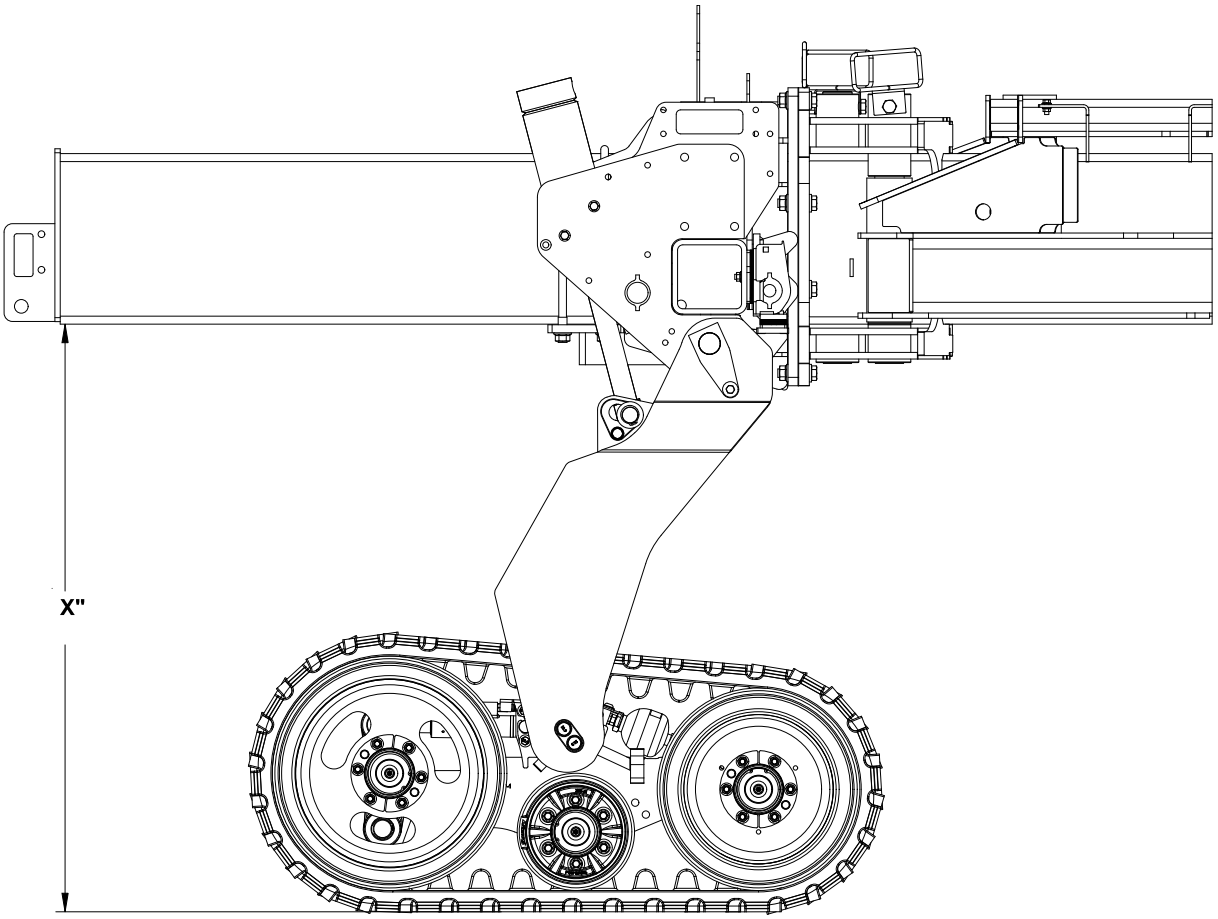

3. Remove the protector cap (G). Connect the filling hose connector (E) on the male coupler of track system hydraulic module (2).
4. Verify the manometer (D) to see if the pressure is still between 1400-1500 PSI / 9650-10350 kPa.
5. If the pressure is under the recommended value, adjust it referring to the HYDRAULIC LOADING SEQUENCE.

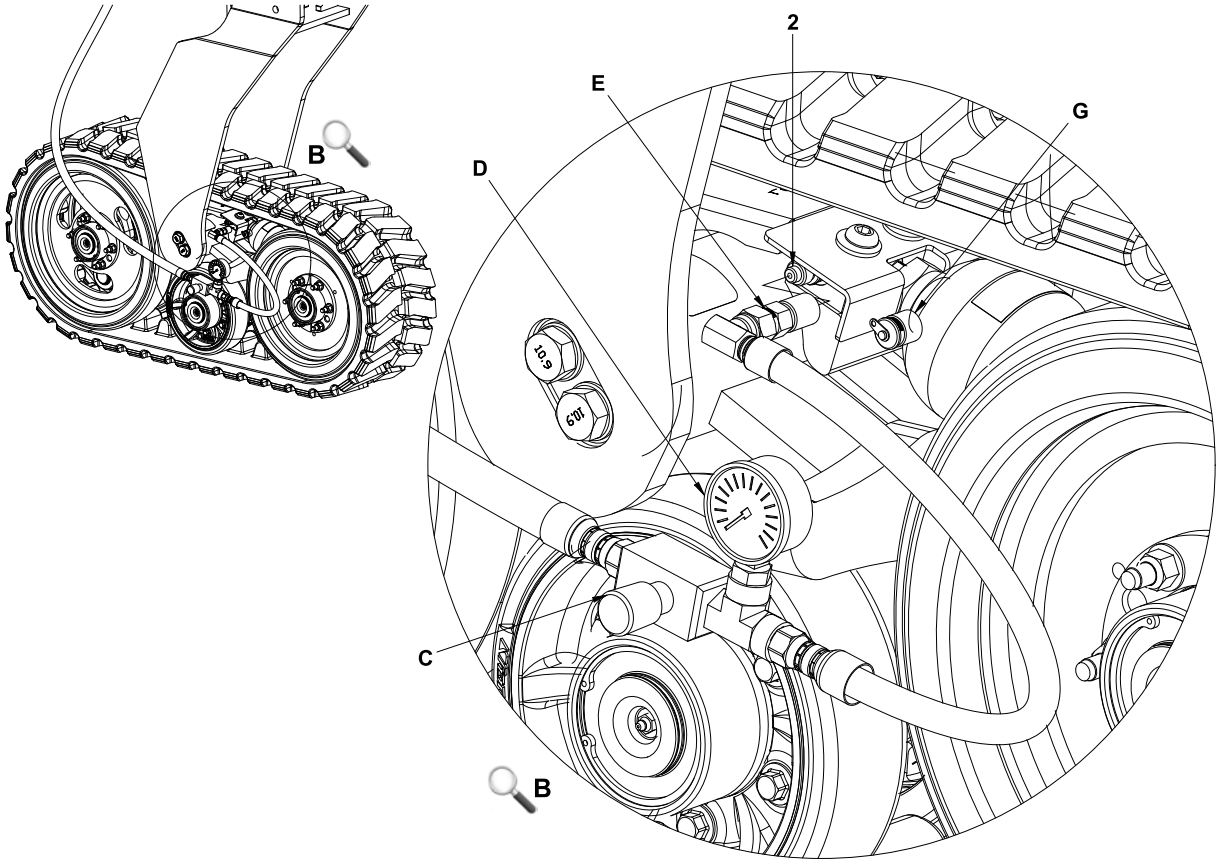

ITEM	PART#	QTY		ITEM	PART#	QTY
2	8035008-0010-3	1				

NOTICE

INADEQUATE TRACK TENSION MAY CAUSE DAMAGE TO OTHER COMPONENTS SUCH AS UNDERCARRIAGE. SEE NEXT TABLE TO DETERMINE THE SIGNS AND CONSEQUENCES OF WRONG TRACK TENSION.

Table 7.1 Consequences of Wrong Tension

TENSION	CONSEQUENCES
Too loose	Premature wear of the track. Vibrations increase Track derailing
Too tight	Premature wear of bearings and bushings.

7.7 UPPER SCRAPER ADJUSTMENT

1. Loosen the 2 bolts (1) located on bottom of the upper scraper.
2. Adjust the scraper at 1/8″ [3.2mm] of the rubber track.
3. When the adjustment is complete, tighten the 2 adjustment bolt (1) and torque at 80 Lb-ft / 110 N-m.
4. Repeat previous steps for opposite side.
5. Repeat the procedure for all track system on the planter.

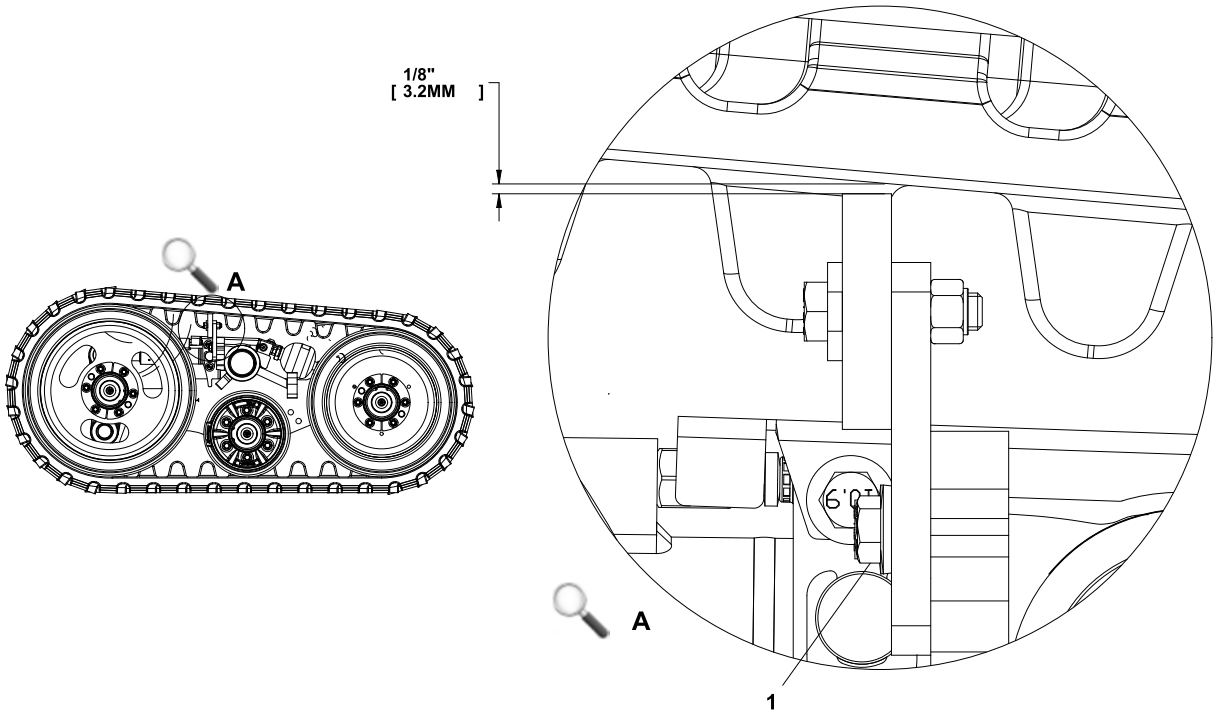

ITEM	PART#	QTY		ITEM	PART#	QTY
1	S1111-12040-0F1	2				

SECTION 8 MAINTENANCE OF THE TRACK SYSTEM

8.1 REGULAR MAINTENANCE SCHEDULE

⚠ CAUTION ⚠

> ALL TORQUES ARE ACCORDING TO APPENDIX “A” TORQUE TABLE UNLESS OTHERWISE SPECIFIED.
> ALWAYS USE SOUCY TRACK APPROVED SPARE PARTS AND LUBRICANTS WHEN YOU MAINTAIN YOUR TRACK SYSTEM.
> INSPECT TORQUE ON ALL BOLTS AFTER THE FIRST TEN HOURS OF USE. OPERATING WITH LOOSE BOLTS CAN LEAD TO DAMAGE TO COMPONENTS, LOSS OF TRACK SYSTEM SUB-ASSEMBLIES, OR SEVERE INJURIES OR DEATH.

- Proper maintenance of the track system will maximize its service life and prevent premature failure of components.
- The next table lists the minimum maintenance requirements applicable to the track system. Maintenance intervals can be adjusted according to factors such as driving habits and operating conditions.

Table 8.1 Regular Maintenance Schedule

Operation	Frequency (hours)						
	First		Every				
	8	10	25	50	250 / 1 year	500 / 2 years	1000 / 5 years
Tension of tracks	X				X		
Tightening of bolts / Inspection	X				X		
Rotation of tracks						X	
Visual inspection of wheels				X			
Visual inspection of frame and attachment					X		
Alignment of tracks	X				X		
Cassette seals replacement & grease packing							X

8.2 AXLE AND WHEEL LUBRICATION

1. Use a lithium-complex or lithium grease with the following properties:
   - EP (Extreme Pressure) additive, Grade NLGI 1;
   - Base oil viscosity of 220 cSt@40 ºC;
   - Operating temperature range from -30 ºC to +160 ºC;
   - Above 10 ºC, a NLGI 2 grade may be used.
2. See the REGULAR MAINTENANCE SCHEDULE table to find the specific lubrication intervals.
3. Remove the bolts (31), the wheel (3), and the spacer (14).
4. Remove the filling plug (39), the retaining snap ring (37), the hub cap (21) and the o-ring (40).
5. Remove the snap ring (36) then pull out the hub assembly (17).

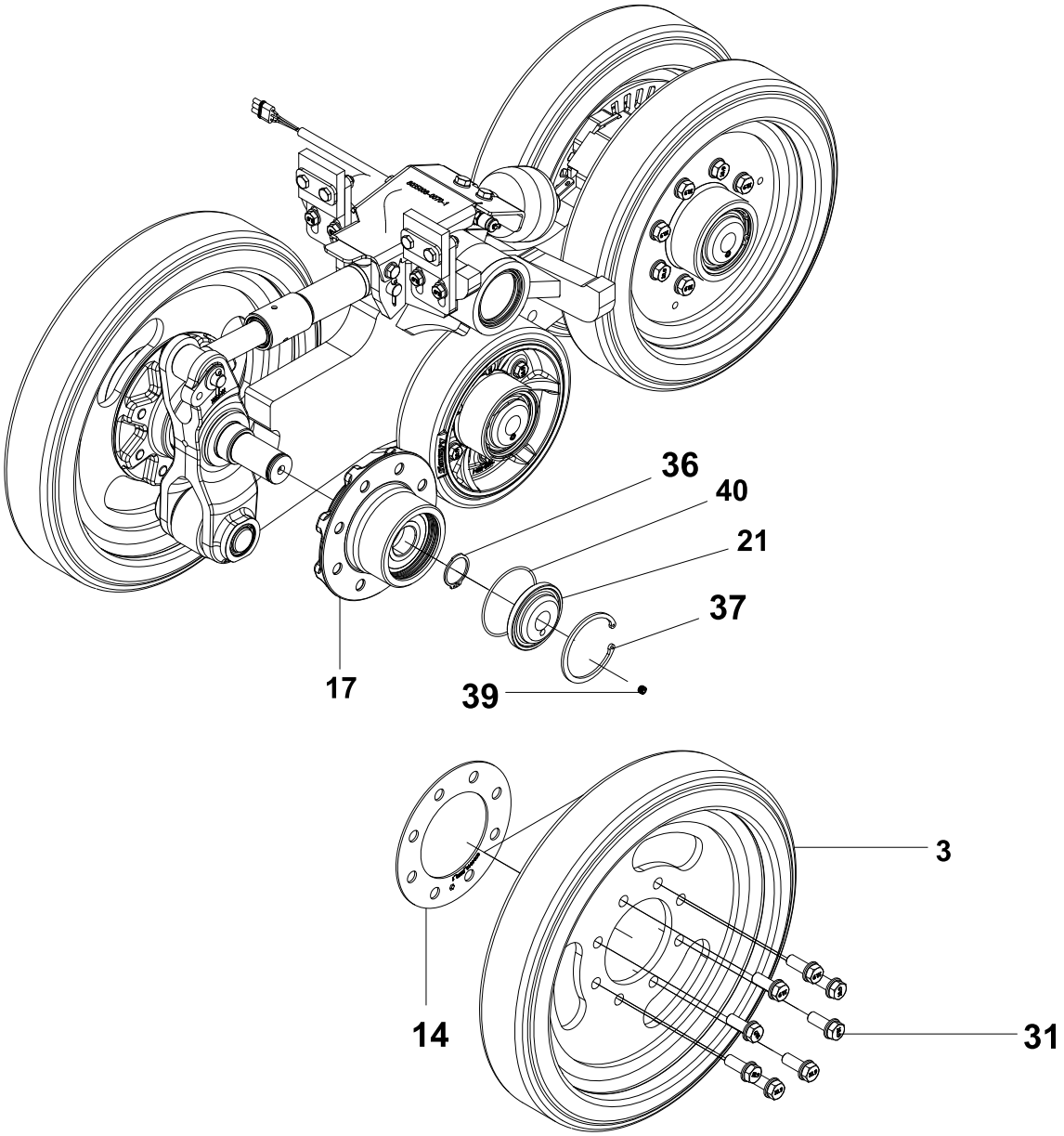

ITEM	PART #	QTY	DESCRIPTION
3	4400272-20	2	22in IDLER WHEEL-GEN3
14	8034013-0250-1	2	REAR IDLER SHIM
17	8034013-0410-1	3	IDLER WHEEL HUB - ASSEMBLY
21	8184010-0050-1	6	HUB CAP - MACHINED - BLACK
31	S1111-16045-0F1	32	HEX. BOLT CL.10.9 M16-2.0 X 30 (DIN 931)
36	S5211-10006-004	6	SNAP RING D1460-0450 DIA. 1.772"
37	S5212-10023-004	6	102mm NOM. DIA INTERNAL RETAINING RING
39	S6484-00007-000	6	SOCKET PLUG M10 X 1.0 TAPER THREAD
40	S6701-00013-000	6	O-RING 4.0 X 4.25 X 0.139"

6. Remove the cassette seal (3) and discard.
7. Inspect the bearing (2), if necessary, replace it by using (KS-1139–1).
8. Remove all used grease.
9. Grease and install the new seal (3).

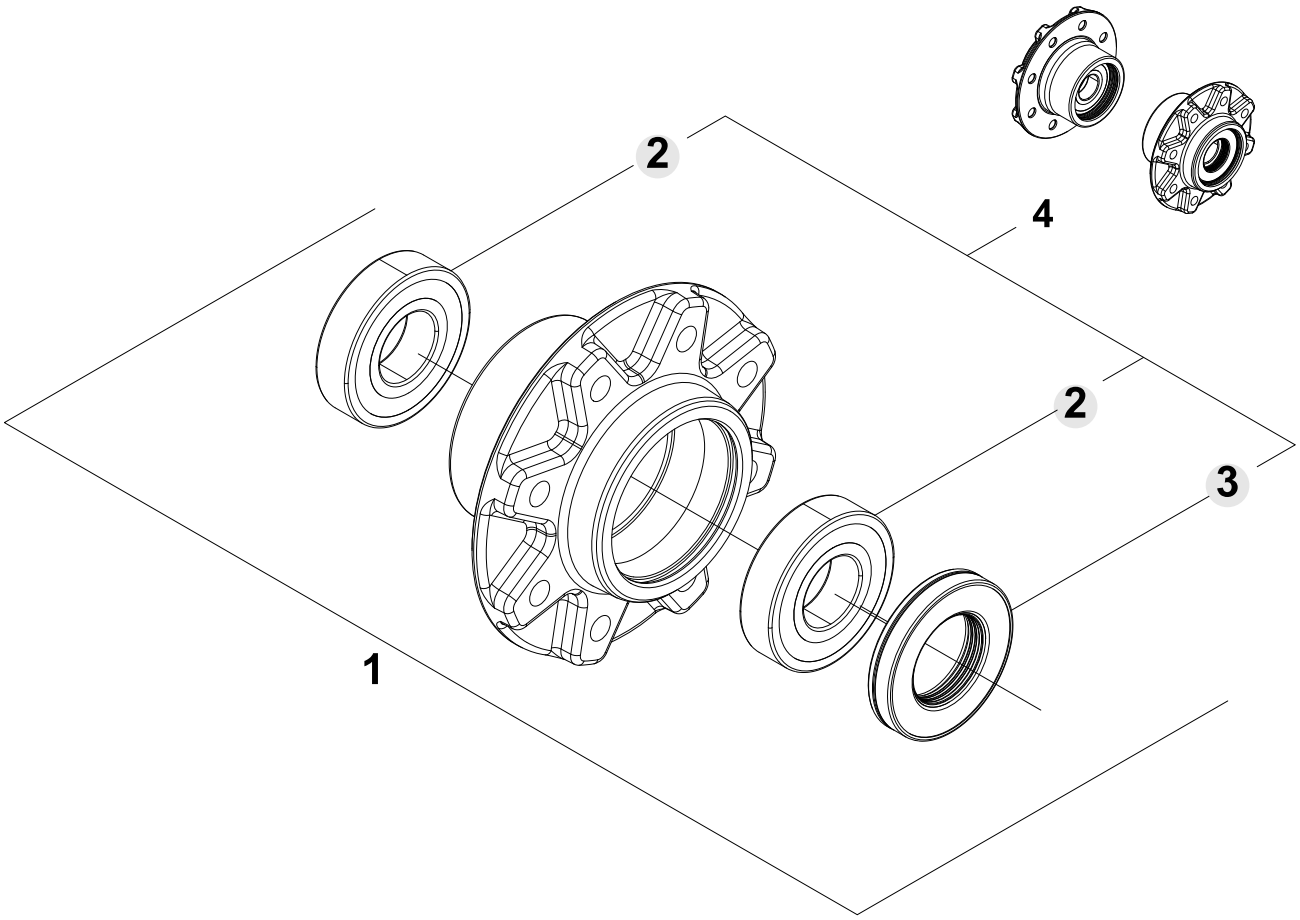

ITEM	PART #	QTY	DESCRIPTION
1	8034013-0410-1	1	WHEEL HUB ASSEMBLY
4	KS-1139-1	1	SERVICE KIT

NOTICE

SOUCY RECOMMENDS THE REPLACEMENT OF THE CASSETTE SEALS AND LUBRICATION OF THE AXLES EVERY 1000 HOURS OR 5 YEARS.

8.3 CLEANING

⚠ CAUTION ⚠

FREQUENTLY CLEAN ACCUMULATION OF DRY DEBRIS ON THE TRACK SYSTEM AND THE ATTACHMENT TO PREVENT A RISK OF FIRE..

Figure 8.1 EXCESSIVE DRY DEBRIS ACCUMULATION



NOTICE

- **IT IS VERY IMPORTANT TO CLEAN THE TRACK SYSTEM ON A DAILY BASIS, OR MORE FREQUENTLY, ACCORDING TO THE CONDITIONS OF USE. REMOVE THE MUD AND DEBRIS**
- **POOR CLEAN-UP OF THE TRACK SYSTEM CAN CAUSE BREAKAGE OF COMPONENTS. NEVER LET MUDS GET DRY.**

- Operating the vehicle while debris are caught in the track system can damage components.
- Using of a high-pressure washer is acceptable but do not direct the water jet towards the seals.
- Avoid contact with oil, diesel or solvents. Wipe the rubber components if it they come in contact with these substances.
- Store in a dry place, away from UV rays.
- Do not store next to heat source.

8.4 TRACK ROTATION

- Refer to the maintenance chart for more information on how often you should rotate the tracks.
- Visually check the condition of the four tracks, usually inner tracks wears faster.
- If wear on the inner tracks is excessive, compare it to the wear on the external tracks and rotate tracks following the sequence below.

1. Rotation sequence.

Figure 8.2 ROTATION SEQUENCE

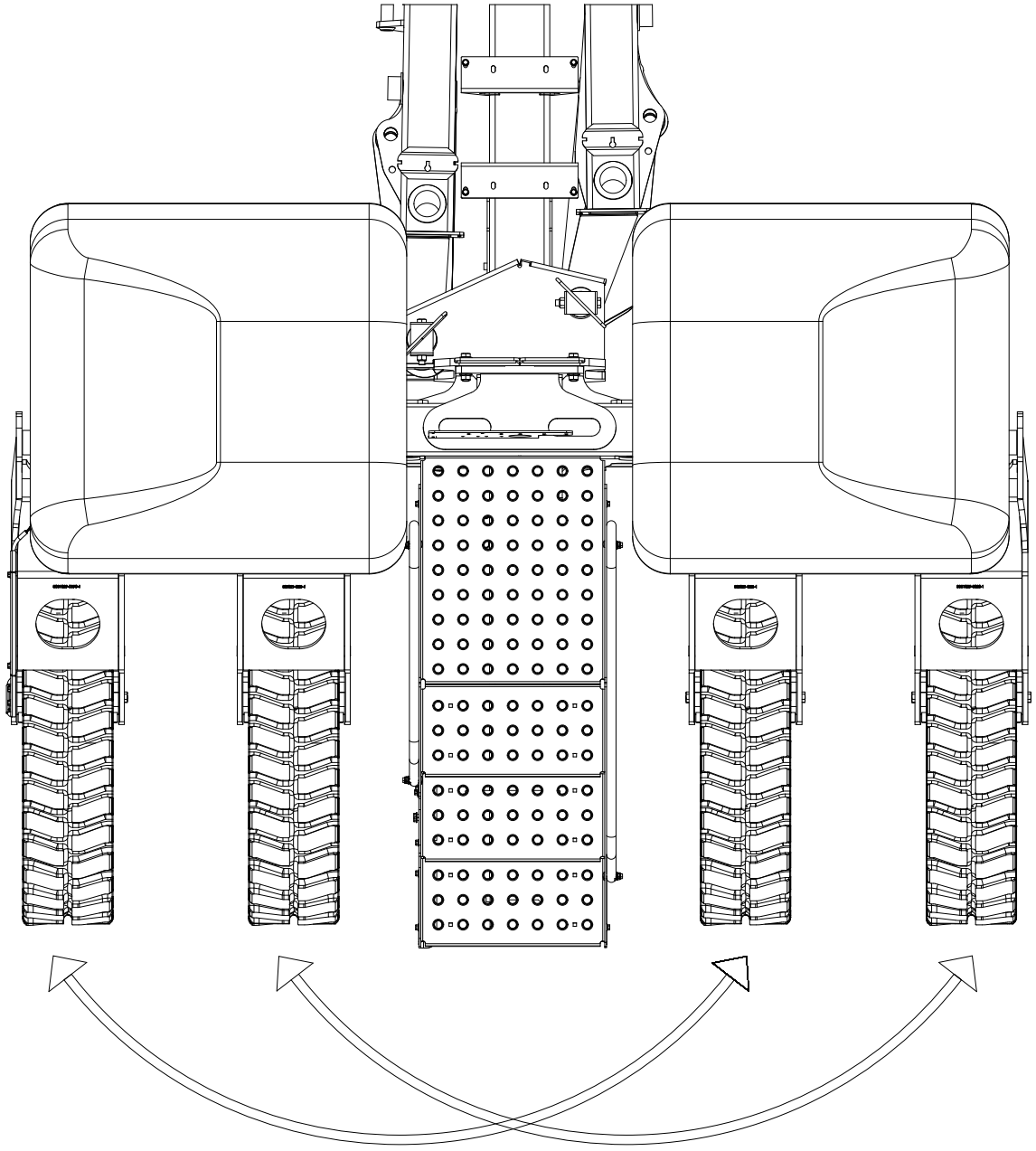

2. Remove track system from planter, see Section 6.
3. Remove bolts (2) and washer (3).
4. Remove undercarriage (4).

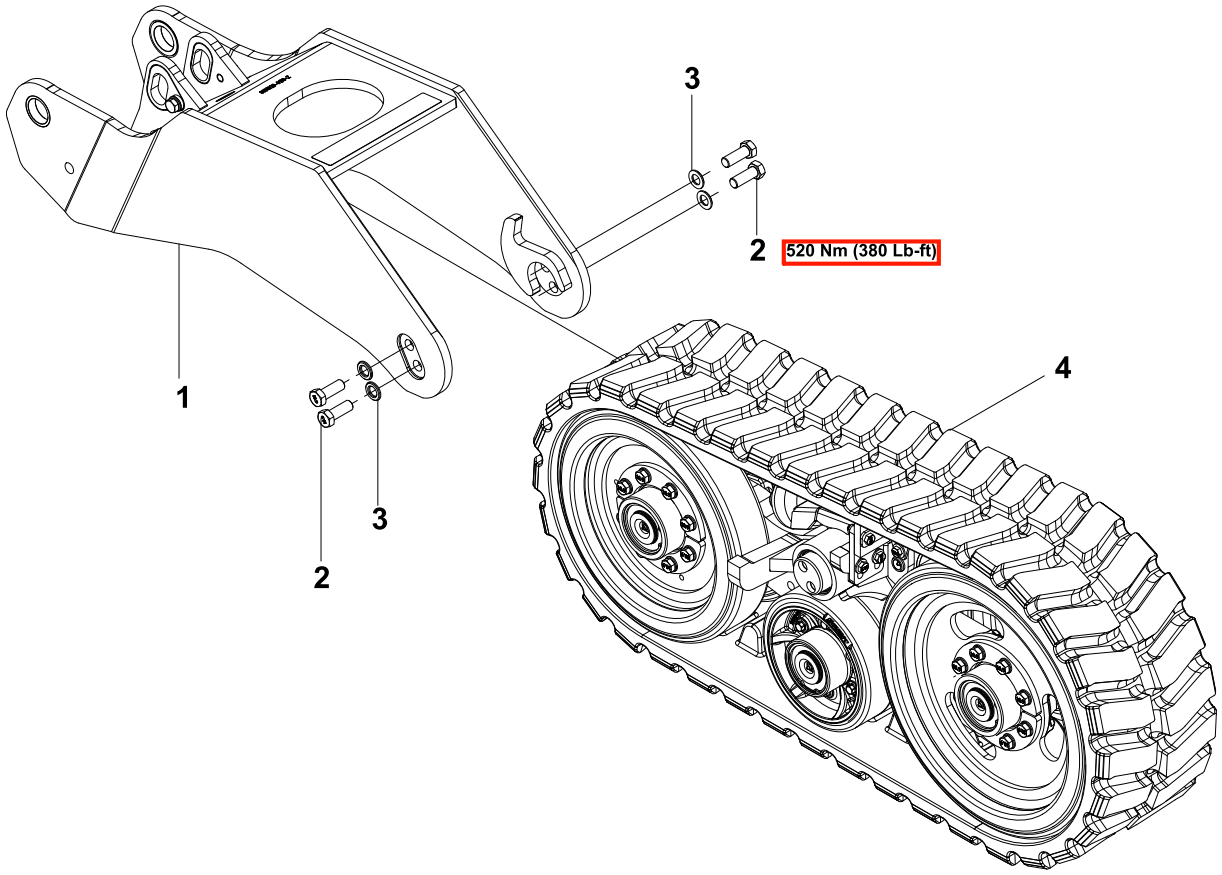

5. When reassembling, apply Loctite 271 on bolts (2) and torque them.

8.5 IDLER WHEELS ROTATION

- Idler wheels have an asymetrical design. If excessive wear is observed on track guide lugs, rotate idler wheels according to the information below.

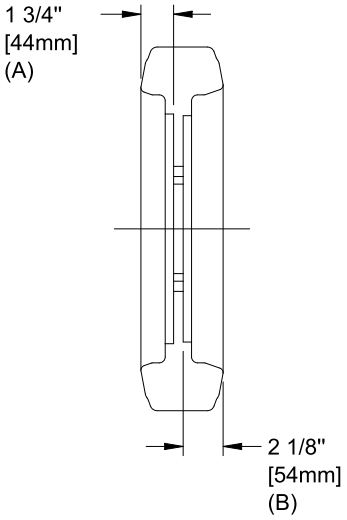

- If new track with no wear on lugs, no rotation required.

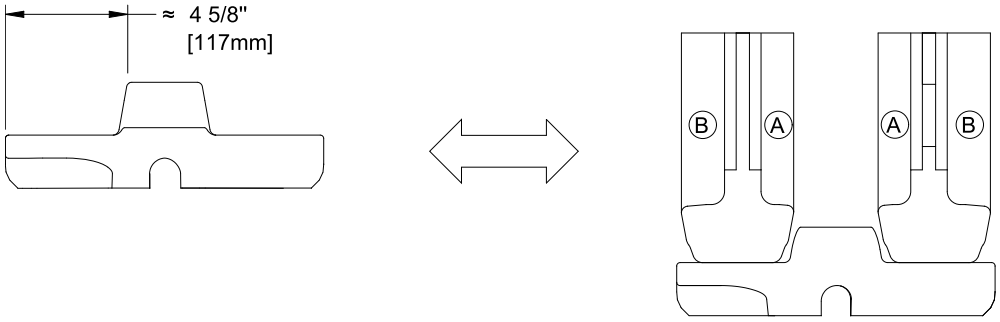

- Used track with wear on lugs, rotation required.

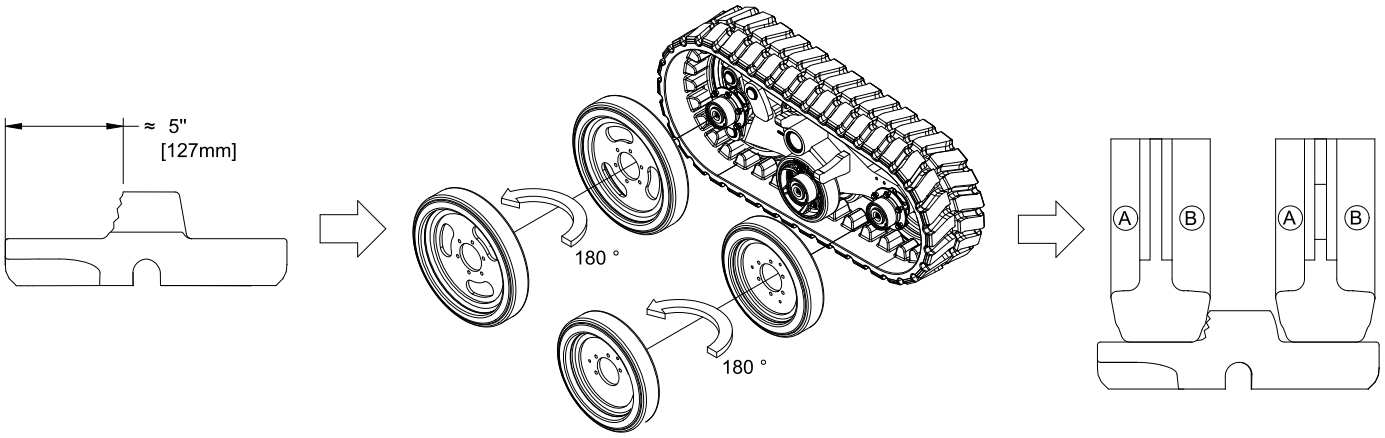

8.6 MAINTENANCE OF THE UPPER SCRAPER BLOCK

1. If the block is too worn U.H.M.W and it is impossible to adjust the scraper 1/8" [3.2mm] of the rubber track. Make a 180° rotation of the block U.H.M.W.
2. On the scraper module, remove bolts (3), washer plate (2), nylon nuts (4) and the U.H.M.W block (1).
3. Make a 180° rotation of the block U.H.M.W (1).
4. Re-install bolts (3), washer plate (2), nylon nuts (4) and the U.H.M.W block (1).
   Torque nylon nuts (4) 50 Lb-ft / 65 N-m.
5. Adjust the scraper begin the procedure by referring to the UPPER SCRAPER ADJUSMENTS PROCEDURE.

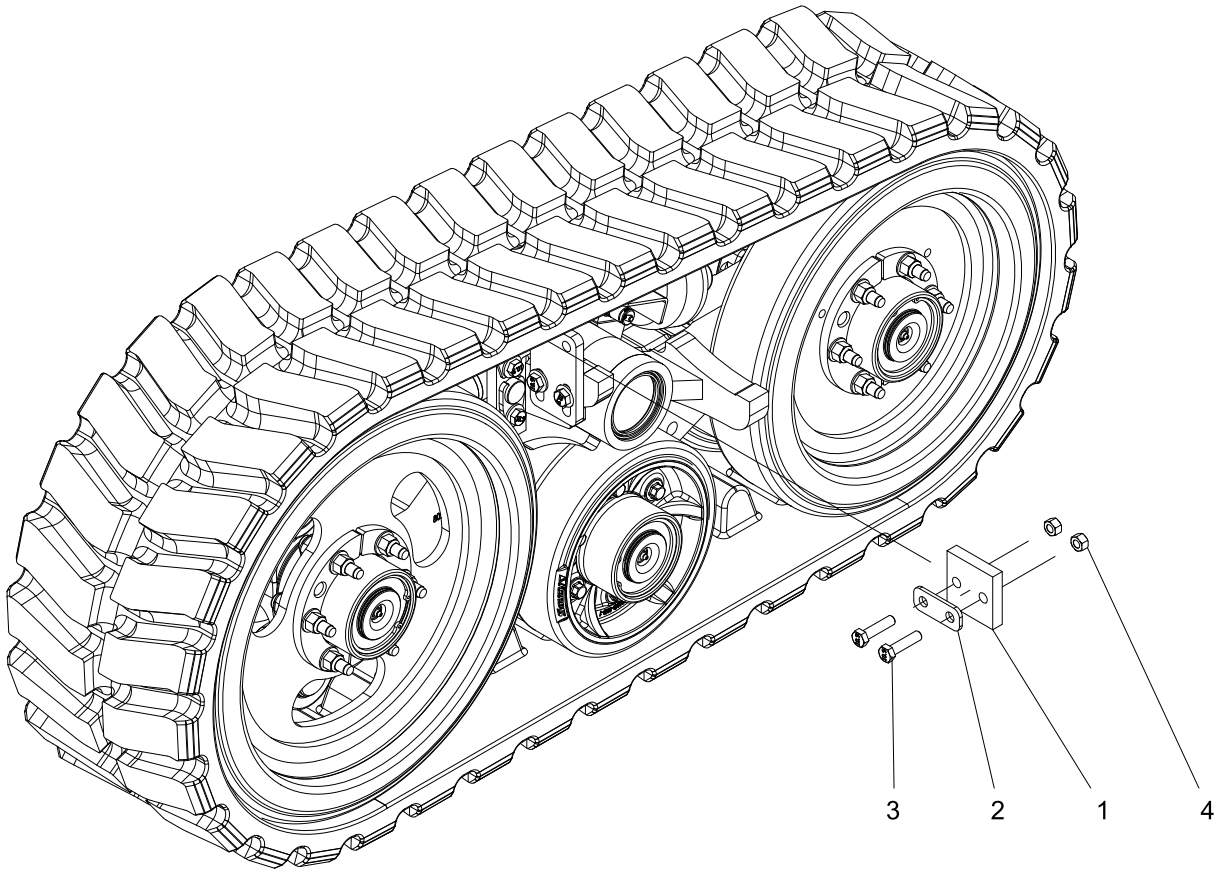

ITEM	PART#	QTY		ITEM	PART#	QTY
1	8032009-0570-1	1		3	S1111-12050-0F1	2
2	8032009-0580-1	1		4	S4186-M120P-021	2

8.7 SPEED SENSOR ADJUSTMENT PROCEDURE

1. Release the track tension as instructed in Section 7.5 .
2. Remove the first circlip (A).
3. Remove the cap (B).
4. Remove the second circlip (C).
5. Remove the wheel (D).

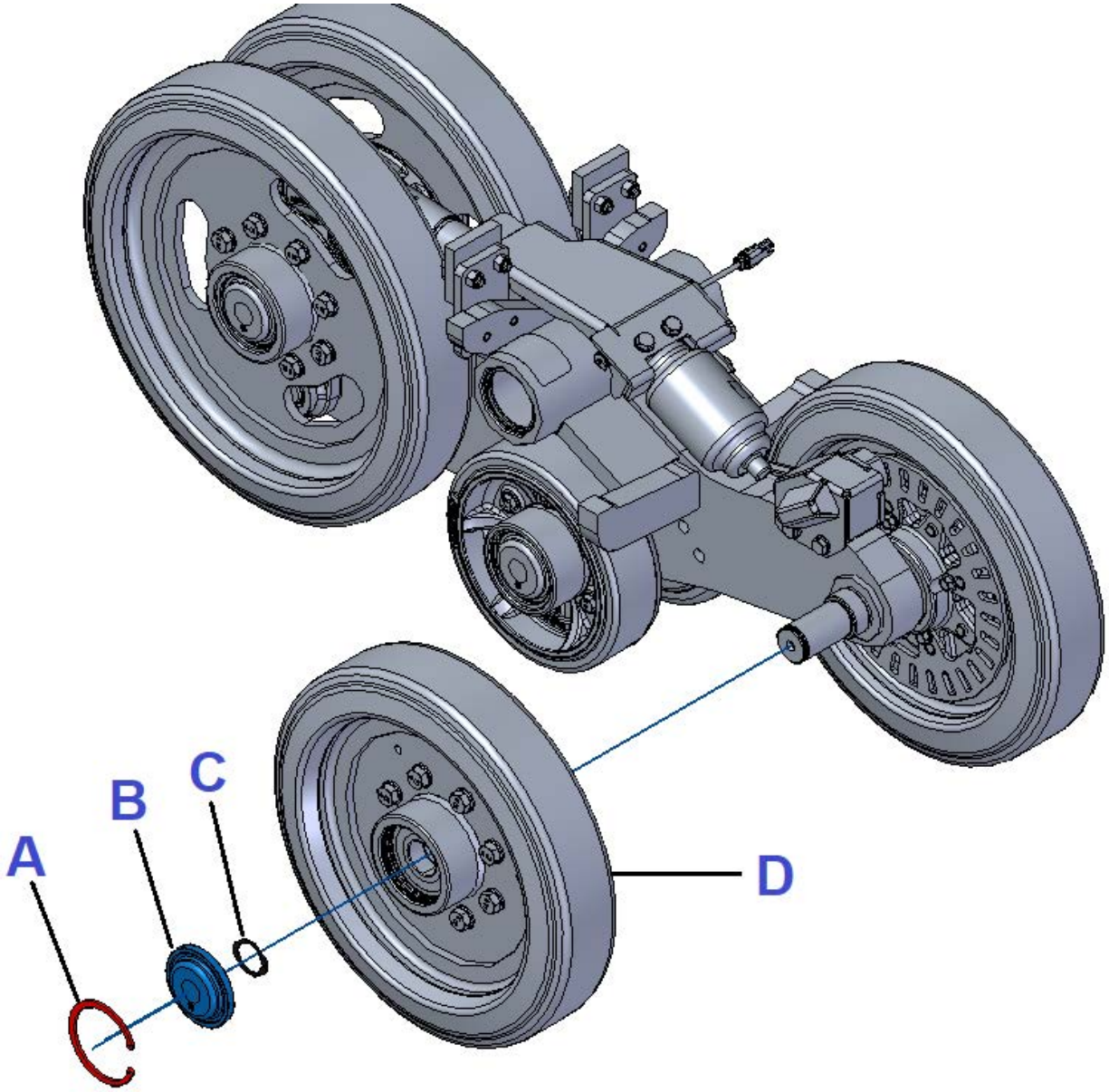

6. Remove the hardware (E).
7. Remove the sensor cover (F).

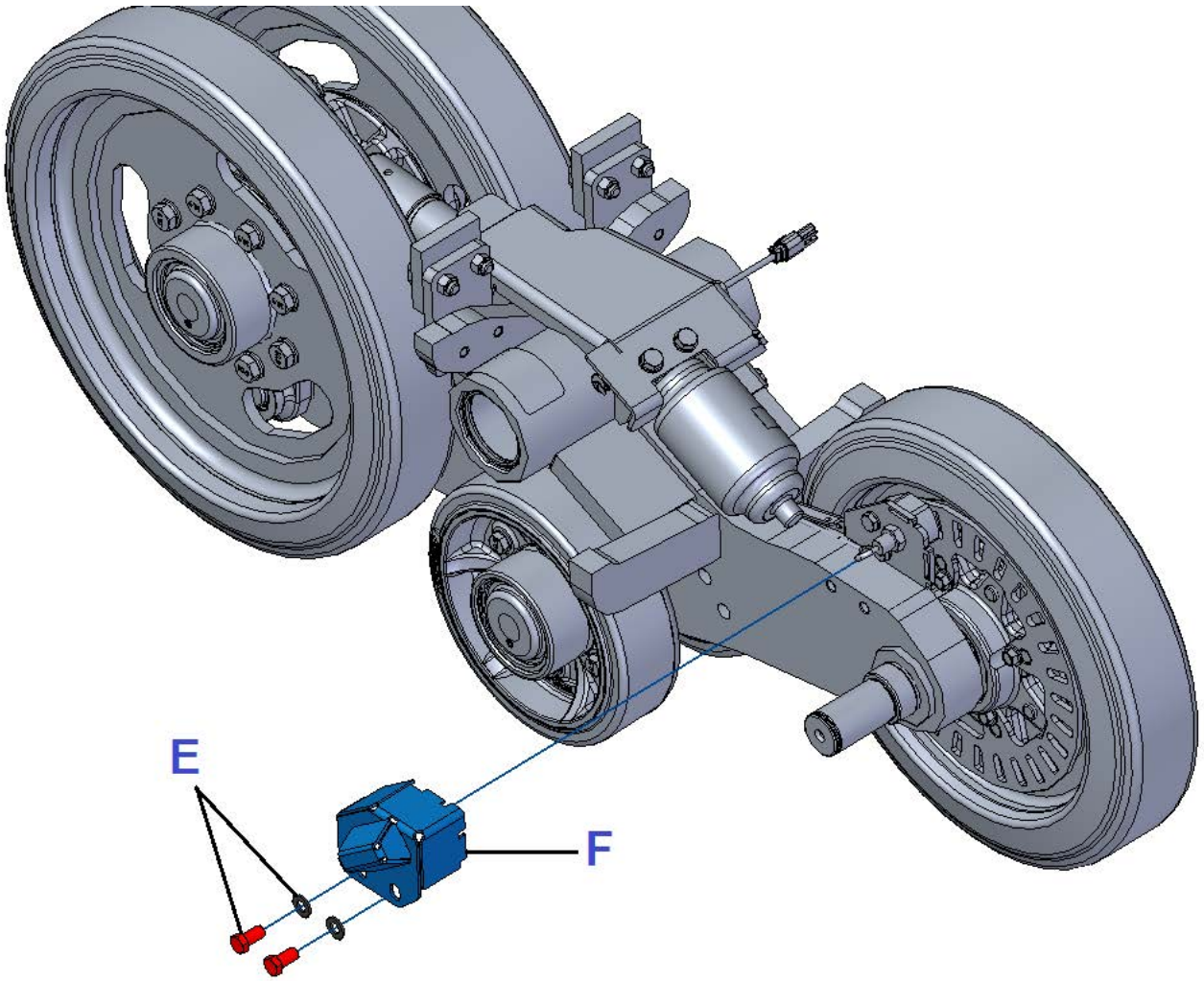

8. Remove the hardware (A) and the inner protection cover (B).

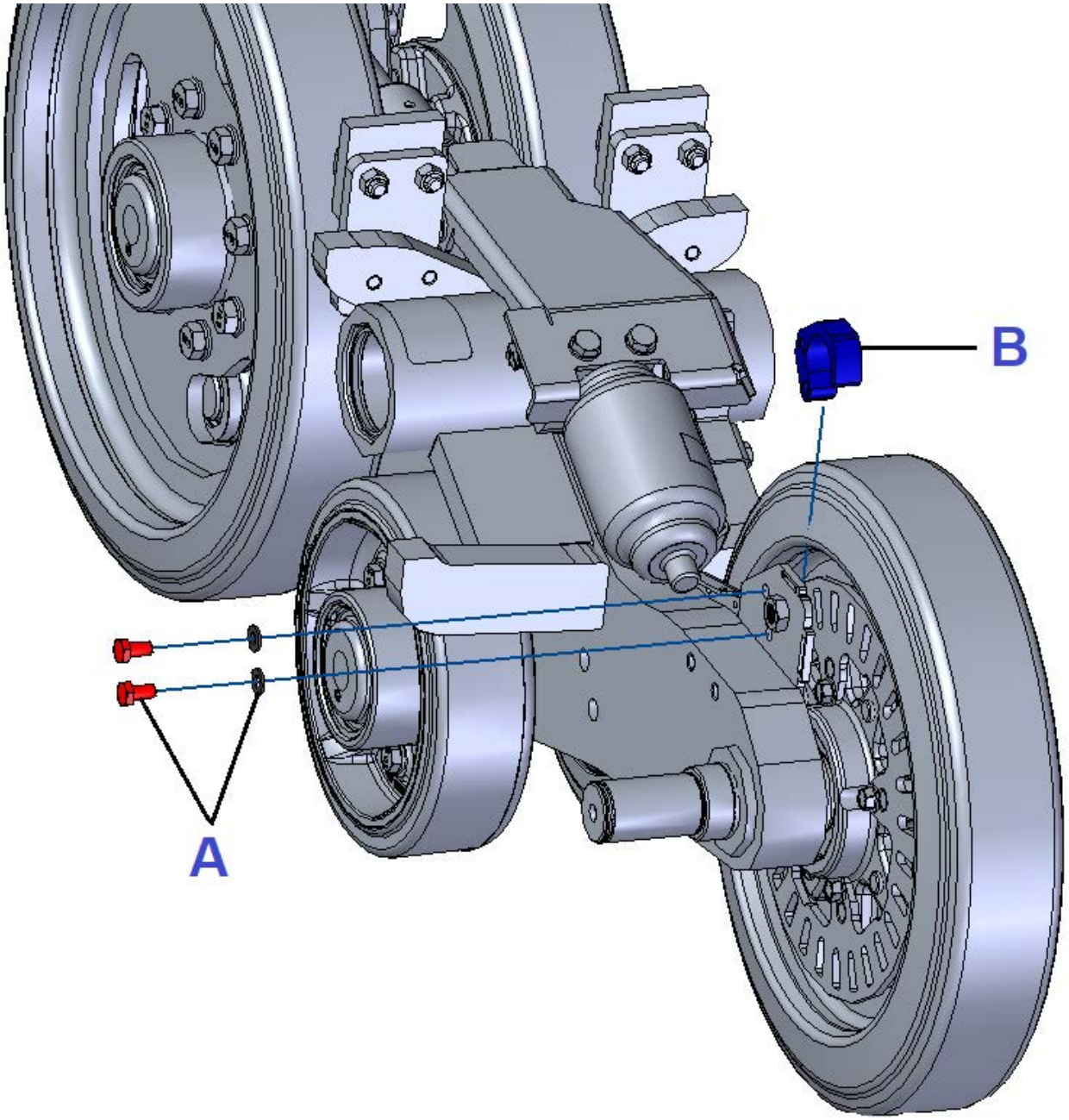

9. Manually loosen both sensor nuts (G).
10. Adjust the position of the sensor (H) to be as close as possible to the disc (J). (less than 1/16in or 1.5mm).
11. Manually lock both sensor nuts (G).

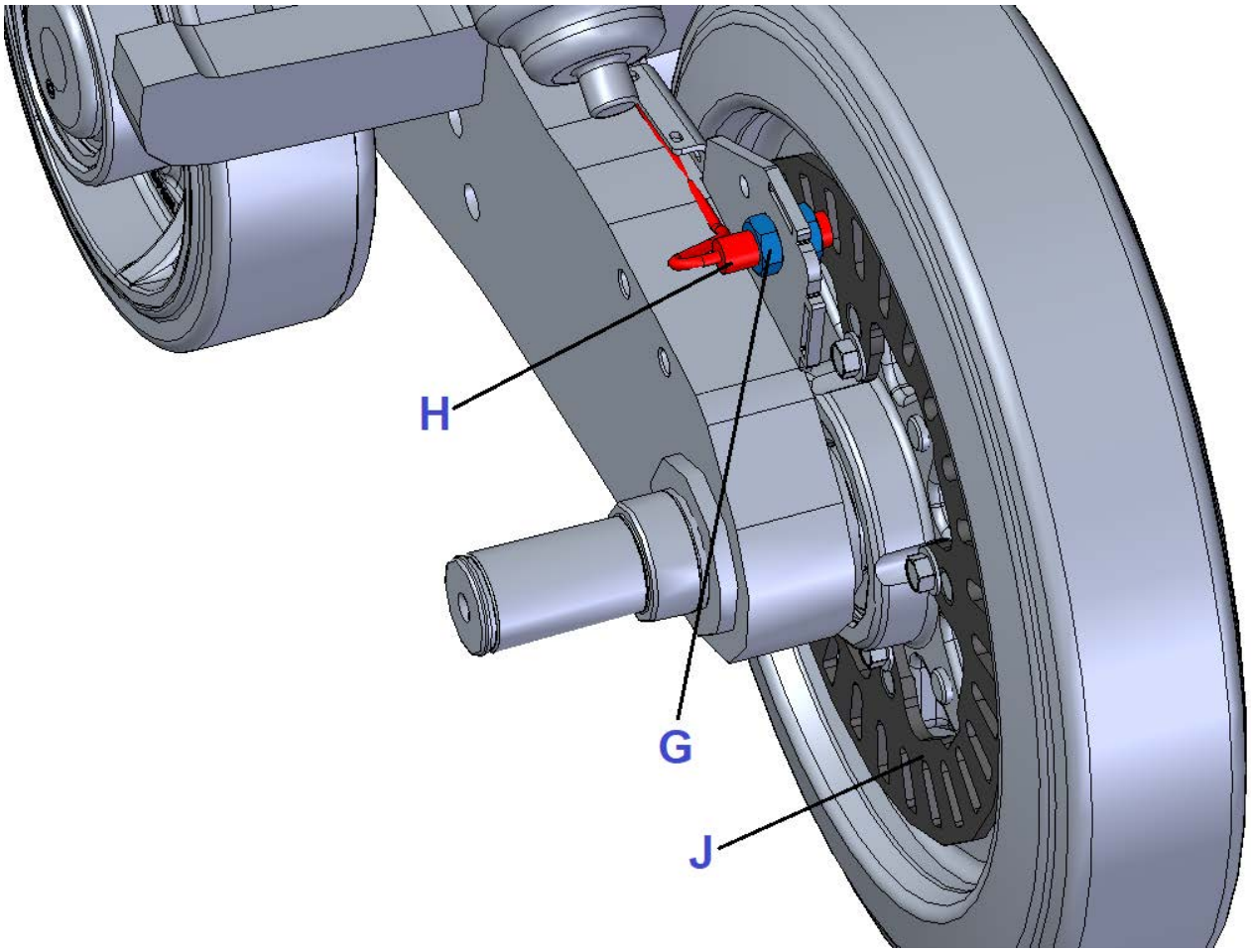

12. Reinstall the sensor cover.
13. Reinstall the wheel and the circlips.

8.8 LONG-TERM STORAGE PROCEDURE

1. Before storing the equipment, perform the following maintenance operation:
   a. Clean by hand any accumulation or packing of debris.
   b. With a high-pressure washer, clean the entire track system, be careful not direct water jet towards the seals.
   c. Using the planter service lock and the lifting system, lower your planter for a few inches to remove load on the external or the internal track kit.
   d. With a pry bar, check to see if there are any loose parts, such as the undercarriage or wheel hubs. If a part moves excessively compared to another, disassemble the part to see what causes the problem and replace it if necessary.
   e. Check the wear of the track (cupping effect on the external tread), as per the procedure in Section 8.
   f. Check the wear on the guide lugs, as per the procedure in Section 8.
   g. Grease all wheels and track tensioner lubrication points.
   h. Release the track tension, as per the procedure in Section 7.

8.9 LONG-TERM STORAGE CONDITIONS

- Store the track system indoors in a cool dry area. Avoid exposure to UV rays. Cover system if stored outside.
- Do not leave all the weight of the equipment on the rubber track during long-term storage. If possible put the support planter on jack stands.
- Do not store the track system in closed areas with electric devices that generate ozone (such as motors), or with petrol chemicals or petrol chemical vapours.
- The track system is flammable. Proper fire suppression equipment is required.

SECTION 9 TRACK SYSTEM OPERATION

9.1 BREAK-IN PERIOD, NEW TRACK

NOTICE

CLOSELY MONITOR THE CONDITIONNING PROCESS OF THE TRACK FOR THE FIRST 50 HOURS OF OPERATION.

- An adequate break-in period is required to condition a new track. Use talc to condition a new track.If you do not have talc , use another dry lubricant material such as oil-dry. Dry soil can also be used to lubricate the track.
- A new, unconditioned track generates more heat in the wheel path and tread profiles than a conditioned track. This is one more reason to condition a new track, thus preventing the track from failing or overheating.
- An inadequate break-in period can generate smoke and the smell of burnt rubber, along with rubber deposits on the track and the frame. It may also cause damage to the inner side of the lugs, such as scuffing.
- To prevent scuffing, a new rubber track must be conditioned BEFORE using it in the fields or on the road. A new track should be conditioned with talc, dry soil or other dry, non-caustic material.. This is done by scattering a thin layer of the material over the inner surface of the track and driving the system slowly for a short period. The dirt acts as a lubricant and enhances the track conditioning process. Conditioning may need to be done more than once if the system is used on the road for long distances.
- After initial conditioning, the system should be operated in the field to further condition the track. The track conditioning process should be checked often for the first 50 hours of operation. After using the system in field conditions for a while, the drive lugs will harden and better resist heat and scuffing.
- If accelerated scuffing should occur with the drive lugs becoming hot, contact your Soucy Track dealer.

9.2 USE OF TALC

- During the break-in phase, spread talc on the inner side of the track. Talc acts as a dry lubricant. It prevents overheating and reduces friction between the wheel and the track. You can buy talc from your tractor dealer (it is typicaly used for treated seed planting with a pneumatic planter). Apply the talc as follows:
  - Sprinkle one cup of talc per track (in order to lubricate the contact surface between the side of the wheel and the drive lugs) and drive the tractor for 2.5 km (1.5 mile).
  - When travelling long distance, apply talc every 30 minutes of travel.

9.3 SAFE OPERATION

1. Comply with the following information to optimize your track system service life:
   - The driving characteristics of your equipment will change with the installation of the track system. Take the time to familiarize yourself with the operation of the system before you use it in the fields.
   - The system is designed for agricultural applications. Avoid driving on hard surfaces at high speed for extended periods.
   - Track tread wears faster if they are used on paved roads extensively. The wear rates of the tread can be minimized by staying off pavement and reducing transport weight and speed.
   - The greatest rate of tread wear occurs on a hot day with a poorly-balanced, heavy machine. Always travel during cooler parts of the day and at reduced speed and weight. This will lower the temperatures of the treads, guide lugs, and rolling components.
   - Start slow when operating in cold weather to allow the track to heat slowly.
   - Contact your **Soucy Track dealer** if you have questions about operating your track system.

9.4 ROAD TRAVEL GUIDELINES

NOTICE

ALWAYS COMPLY WITH THE LOCAL ROAD SAFETY REGULATIONS REGARDING FARM VEHICLES WHEN TRAVELLING ON PUBLIC ROADS WITH YOUR TRACK.

NOTICE

ALWAYS REFER TO THE LOAD AND SPEED RATING SPECIFICATION (SECTION 1) TO KNOW THE MAXIMUM CAPACITY OF THE TRACK SYSTEM..

1. Using rubber tracks on roads requires a minimum of precaution. Here is some information about track behavior under certain conditions and what you can do to maximize the service life of your system:
   - Like a tire, the worst enemy of a rubber track is heat.
   - The combination of high speeds and heavy loads, as well as uneven road conditions, may lead to track overheating and premature damage to rubber tracks, wheels and other components.
   - To avoid this kind of inconvenience, Soucy Track recommends adjusting your speed on long distance trips, hot pavement or uneven road surfaces.
   - To find out if a rubber track is overheating, the rule of thumb is to feel the internal wheel path of the track as well as the rubber surface of the wheels with your hand. If your hand can stand the heat, the track is not overheating. Check the inside wheels and corresponding wheel path (the wheel pointing towards the vehicle) as they may be affected by concave road.
   - If overheating occurs, simply try slowing down or, if possible, unload the vehicle.

SECTION 10 WARRANTY POLICY AND PROCEDURE

NOTE

In case of doubt or differences of interpretation, the English version shall prevail over the translated text.

10.1 SCOPE

- This warranty policy applies to the following products only: **Soucy Track Systems from Soucy International Inc.** This document is a guide explaining the warranty's limited conditions for the agricultural track system and winter trail groomer. Please note that Soucy International Inc. retains the right to make a final decision regarding repair or replacement of parts.

10.2 COMMITMENT

- Soucy International Inc. guarantees that all of its products will be free from any manufacturing or material defects for its track system kits and related accessories;
- Soucy International Inc. commits to cover the replacement costs of the product or parts that are defective for the entire duration of the warranty;
- All parts deemed defective, and which lead to a guarantee claim, must be inspected by a qualified representative or an authorized agent of Soucy International Inc. for the warranty to be approved. To facilitate inspection, Soucy International Inc. can demand that the defective part(s) be returned. In other circumstances, sharp and precise pictures clearly showing the problem may be required;
- Soucy International Inc. retains the right to replace a defective part/product with an updated version. These modifications will not in any case reduce the original product integrity.

10.3 WARRANTY PERIOD

- **New product of the ORIGINAL Series for agricultural use**: the warranty period starting from the date of retail sale is twelve (12) months or a thousand (1,000) hours of operation, whichever comes first;
- **New product of the ORIGINAL Series used exclusively for winter trail grooming:** the warranty period starting from the date of retail sale is twenty-four (24) months or a thousand (1,000) hours of operation, whichever comes first;
- **New product of S-TECH Series:** the warranty period starting from the date of retail sale is twenty-four (24) months or a thousand (1,000) hours of operation, whichever comes first;
- **Rubber tracks:** please refer to the "RUBBER TRACKS REPLACEMENT PROGRAM" section for more information;
- **Spare parts:** any spare part is warranted for a period of six (6) consecutive months starting from the date of retail sale;
- **Repackaged and/or repaired product:** any product or part repackaged and/or repaired by Soucy International Inc. or one of its authorized agents during the original warranty period will continue to be warranted for the remaining period of that warranty.

10.4 EXCLUSION

- Normal wear on mobile parts other than failures caused by a manufacturing or material defect that has been correctly identified;
- Travelling expenses for the tracked vehicle, equipment and staff needed for repairs;
- Parts that were not manufactured or provided by Soucy International Inc.;
- Shop supplies and repairs made by a third party, other than the agent authorized by Soucy International Inc.;
- Use of the product in a field other than agriculture and winter trail grooming; except with the formal written consent of Soucy International Inc.;
- Normal wear and tear of lugs due to prolonged used on roads and/or hard surfaces and/or abrasive surfaces are not deemed warrantable. Please refer to the Soucy Track Operation Manual for details;
- Damage caused by blunt objects (e.g. cut, partial tearing of rubber, etc.) that are not the result of a manufacturing or material defect;
- Damage resulting from negligence or from a mechanical failure of the tractor, as well as damage caused by an accident or the spilling of chemicals on the track;
- Damages seen as purely aesthetic that do not hinder the system performance or durability.

10.5 LIMITATIONS

NOTE

Soucy International Inc. cannot be held responsible in the following cases:

- For indirect, incidental, or consequential damages;
- For damage to a tractor or implement or equipment pieces designed and manufactured by a third-party manufacturer;
- For any loss of earnings, or loss of use of an equipment part, caused by a mechanical failure;
- When Soucy International Inc. is not informed by the client or authorized agent of any defect or failure within a reasonable time or during the warranty period (please refer to the "TERMS" section for more information);
- When the failure was caused by an installation deemed inappropriate by Soucy International Inc.;
- When the product and/or part failure is the result of abuse, negligence or inadequate maintenance;
- When the product was modified in any way without the implicit consent of Soucy International Inc. or one of its representatives.

10.6 TERMS

1. For the product to be eligible for the warranty, the product commissioning date must have been previously registered by the reseller with Soucy International Inc.;
2. Only claims made by an agent authorized by Soucy International Inc. during the coverage period will be considered for warranty purposes;
3. The Claim Form of Soucy Track must be duly completed and handed in with a proof of purchase for the Soucy Track System;
4. Claims must be made within a reasonable time after repairs and no later than thirty (30) days after the warranty expired, otherwise claims will be automatically rejected;
5. Defective parts must be kept by the authorized agent of Soucy Track for a six (6) month period after the claim submission;

> ***NOTICE***
>
> **SHARP AND PRECISE PICTURES CLEARLY SHOWING THE SITUATION AND THE PROBLEM AT HAND CAN BE REQUIRED.**
> **MOREOVER, SOUCY INTERNATIONAL INC. RETAINS THE RIGHT TO DEMAND THAT ANY DEFECTIVE PART BE RETURNED.**

6. Any repair done by an authorized agent of Soucy Track will be subject to a reimbursement of labour costs under the following conditions:
   a. Labour time allowed for repairs will be based on a time formula established by Soucy International inc.;
   b. Labour time will be reimbursed at the current hourly rate of the authorized agent of Soucy Track and subject to the approval of Soucy International;
   c. Cost of part(s) will be reimbursed at the distributor or dealer price plus 15% in order to cover shipping and handling charges;
   d. No additional shipping costs, other than those mentioned in ITEM 6(c), will be reimbursed for shipping of part(s).

Page Intentionally Left Blank

SECTION 11 REPLACEMENT PROGRAM FOR RUBBER TRACKS

11.1 AGRICULTURAL TRACK

- Rubber tracks from Soucy International Inc. benefit from a prorated replacement warranty program.
- Soucy rubber track used for agricultural and winter-trail grooming purposes: prorated replacement coverage of up to twenty-four (24) months or two thousand (2000) hours of operation, whichever comes first, based on the end user purchase date

ALL SOUCY TRACK PRODUCT LINES				
Agricultural and winter-trail grooming uses: 24 months/2,000 hours, whichever comes first				
Period of use from the first application	**0 to 1000 hours**	**1001 to 1500 hours**	**1501 to 2000 hours**	**> 2000 hours**
0 to 12 months	**0%**	**40%**	**70%**	**100%**
13 to 24 months	**40%**	**60%**	**80%**	**100%**
% paid by the customer based on the suggested retail price				

11.2 ELIGIBILITY

1. To be eligible for the warranty program:
   a. The customer must complete the "rubber track failure or defect Analysis Report" and submit it to Customer Service department for analysis and approval. This should be accompanied by pictures showing clearly the nature of failure or defect.
   b. The warranty only covers the tracks that have become unusable due to defects in material or manufacturing as recognized by Soucy in the evaluation of the failure or defect analysis report.
   c. A minimum thickness of 45% of the initial thickness must remain on the thread height. See below for thread measurement method.
   d. Without proof of purchase, the official date used for the warranty coverage will be the production date.
2. Soucy International Inc. reserves the right to reject any claim considered incomplete.

11.3 OWNER COMMITMENT

1. Installation fees.
2. Undercarriage components well maintained and regularly adjusted.
3. Notify case of defect within the warranty period and provide proof of purchase and documents required for the claim.

11.4 WARRANTY PERIOD FOLLOWING THE REPLACEMENT

1. Rubber track replaced during the warranty period affected by a defect of manufacture will extend as follows:
   - when the customer pays less than 50% of the cost of the track, the warranty period is limited to the remainder of the original warranty period.
   - when the customer pays 50% or more of the cost of the track, the full warranty will apply.

11.5 OTHER CONDITIONS

- Warranty track must be purchased within 90 days of approval of the claim.
- The manufacturer reserves the right to claim the track for a period of three months to conduct product improvement verifications.
- The manufacturer reserves the right to cancel in part or in whole the warranty if an evidence of non-compliance is determined.

1. **Method to measure the height of the tread:**
   a. Place the rubber track into a position so that the tread is straight and flat.
   b. Use a straight edge and a tape measure:
      - Measure the height of the thread remaining in each raceway of tracks (the straight edge parallel to the flange of the track and centered on the thinnest point is the centre of the wheels).
   c. Repeat the measurement at 3 locations along the length of the track.
   d. Record each of the dimensions on a sketch of the track.



RESOURCES

When one or more parts have defects that are covered by the warranty, please contact Customer Service at Soucy International Inc. to get any assistance you may require in order for your claim to be processed properly.

Soucy International inc.
5450 Saint-Roch Street
Drummondville (Québec) J2B 6W3
CANADA

Phone: 1-877-474-6665
E-mail : **agsupport.si@soucy-group.com**

SECTION 12 APPENDIX

APPENDIX A: STANDARD TORQUE TABLE

Table 12.1 STANDARD TORQUE TABLE

Bolt Ø (mm)	**6**		**8**		**10**		**12**		**14**	
Thread	Coarse	Fine	Coarse	Fine	Coarse	Fine	Coarse	Fine	Coarse	Fine
Ptich (mm)	1,00	0,75	1,25	1,00	1,50	1,00	1,75	1,25	2,00	1,50
Class	**Tightening Torque Nm**									
8,8	9,3	10	22	24	45	50	78	85	124	134
10,9	14	15	33	35	65	73	114	125	182	197
12,9	16	17	39	41	77	85	133	146	213	230
Bolt Ø (mm)	**16**		**18**		**20**		**22**		**24**	
Thread	Coarse	Fine	Coarse	Fine	Coarse	Fine	Coarse	Fine	Coarse	Fine
Pitch (mm)	2,00	1,50	2,50	1,50	2,50	1,50	2,50	1,50	3,00	1,50
Class	**Tightening Torque Nm**									
8,8	193	206	266	299	376	417	513	563	650	739
10,9	283	302	391	439	552	613	753	827	954	1085
12,9	331	353	457	514	646	717	881	967	1117	1270

Bolt Ø (mm)	**6**		**8**		**10**		**12**		**14**	
Thread	Coarse	Fine	Coarse	Fine	Coarse	Fine	Coarse	Fine	Coarse	Fine
Ptich (mm)	1,00	0,75	1,25	1,00	1,50	1,00	1,75	1,25	2,00	1,50
Class	**Tightening Torque (ft-lb)**									
8,8	6,8	7,5	17	18	33	37	57	63	92	99
10,9	10	11	24	26	48	54	84	92	134	145
12,9	12	13	29	31	56	63	98	108	157	170
Bolt Ø (mm)	**16**		**18**		**20**		**22**		**24**	
Thread	Coarse	Fine	Coarse	Fine	Coarse	Fine	Coarse	Fine	Coarse	Fine
Ptich (mm)	2,00	1,50	2,50	1,50	2,50	1,50	2,50	1,50	3,00	1,50
Class	Tightening Torque (ft-lb)									
8,8	142	152	196	220	277	308	378	415	479	545
10,9	209	223	288	324	407	452	555	610	704	801
12,9	244	261	337	379	447	529	650	713	824	937

Table 12.2 COUNTERSUNK BOLTS

Bolt Ø (mm)	**12**	**14**	**16**	**18**	**20**
Class	**Tightening Torque Nm**				
10,9	81	108	154	213	301
Bolt Ø (mm)	**12**	**14**	**16**	**18**	**20**
Class	**Tightening Torque (ft-lb)**				
10,9	60	80	114	157	222

NOTE

- Applicable to new lubricated, new unlubricated and used lubricated bolts.
- Torque indicated on drawing is always prevailing. Torque Tolerance ± 5%

In order to prevent any transcription and/or transmission error during registration process, We recommend using the electronic copy of this form available on the Soucy Track Data Center at: http://datacenter.soucy-track.com.
Note that you must be a Soucy Track dealer to apply for a free access to this Web site

TRACK SYSTEM REGISTRATION FORM

Fill out the following fields and return to Soucy Track Technical Service Department at service.soucy-track@soucy-group.com or by fax at: 819-477-9423

PURCHASING INFORMATION

DEALER NAME: _____
CONTACT PERSON: _____
CLIENT NAME & ADDRESS: _____

_____

VEHICLE BRAND: **MODEL:**
HOURS OF USAGE: _____ **hr at time of instalation** **MODEL YEAR:** _____

SOUCY TRACK SYSTEM MODEL: _____
TRACK PURCHASING DATE: _____
INVOICE NUMBER: _____

WERE THE OPERATOR MANUAL AND WARRANTY POLICY SUPPLIED AND EXPLAINED TO CLIENT?

☐ YES ☐ NO

TRACK SYSTEM IDENTIFICATION

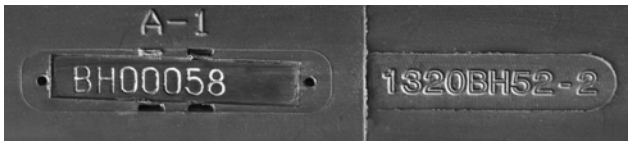

SERIAL NUMBER PART NUMBER



RUBBER TRACKS IDENTIFICATIONS

FRONT TRACKS P/N: _____
FRONT LH S/N: _____
FRONT RH S/N: _____

REAR TRACK P/N: _____
REAR LH S/N: _____
REAR RH S/N: _____

TRACK FRAMES IDENTIFICATIONS

FRONT FRAMES P/N: _____
FRONT LH S/N: _____
FRONT RH S/N: _____

REAR FRAMES P/N: _____
REAR LH S/N: _____
REAR RH S/N: _____

PRIMARY USE OF TRACK SYSTEM

TYPE OF USE

SNOW GROOMING: **SPECIFY:** _____

AGRICULTURE - Primary use: **SPECIFY:** _____

AGRICULTURE - Secondary use: **SPECIFY:** _____

COMMERCIAL UTILITY: Please specify **SPECIFY:** _____

IS EQUIPMENT USED FOR CUSTOM WORK: ☐ YES ☐ NO

TYPE(S) OF CROP

☐ RICE ☐ SOYBEAN ☐ CORN ☐ OTHER
☐ CEREALS ☐ SUGAR CANE **SPECIFY:** _____
☐ CRANBERRY ☐ VEGETABLES